XR-5000/7000

TEAC®

TEAC®

XR-5000/7000

VIDEO CASSETTE DATA RECORDER

SERVICE MANUAL

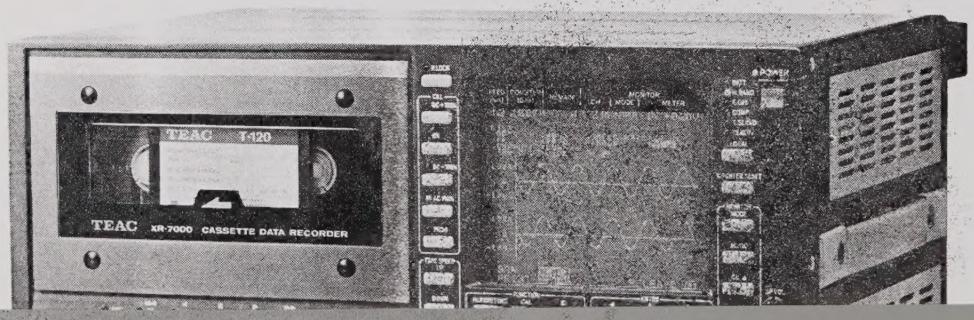

INTRODUCTION

This service manual is intended for use by all technical service engineers at dealars. It covers essential information for after-sales services such as repair procedure, parts replacement, adjustment, calibration and ordering new parts.
If you find anything unclear or difficulties in repair procedure, please contact TEAC Corp. Our address is shown on the reverse side of the cover.

These models are designed to enable easier maintenance and adjustment by use of extension cards.

Many kinds of optional unit are available for the XR-5000/7000.
The models can be used more extensively with those units. For more information, refer to the optional unit list on later pages.

Table of Contents -1

	Page
Introduction	
SECTION 1 GENERAL DESCRIPTION	1-1
1-1 Specifications	1-2
1-2 Basic construction	1-5
1-3 Dimensions XR-5000/7000	1-6
SECTION 2 EQUIPMENT REQUIRED/ACCESSORIES	2-1
2-1 Measuring instruments (for mechanical)	2-1
2-2 TEAC extension cards	2-1
2-3 Tools and Jigs (for adjusting the tape transport)	2-2
2-4 Measuring and testing instruments	2-3
2-5 Accessories	2-5
SECTION 3 CIRCUIT DESCRIPTION	3-1
3-1 Servo system	3-1
3-2 FM AMP system	3-2
3-2-1 FM AMP recording system	3-2
3-2-2 FM AMP reproducing system	3-3
3-3 TTP control PCBA	3-5
3-3-1 Tape loading	3-5
3-3-2 Timing to stop tape loading	3-5
3-3-3 Excuting of an EJECT command	3-6
3-4 TTP I/F PCBA	3-7
3-4-1 Control commands	3-7
3-4-2 EOT/BOT sensor	3-9
3-4-3 Output data	3-10
3-5 Overall specifications chart	3-12
SECTION 4 ELECTRICAL	4-1
• Destination and meaning of input/output symbols on the schematic diagrams	4-1
• List of abbreviation for schematic diagrams	4-2
4-1 Schematic diagram, Printed circuit board and parts list	4-5
4-1-1 ID BOARD	4-5
4-1-2 TTP CONTROL	4-10
4-1-3 BIAS MIXER	4-15
4-1-4 DISPLAY MPU	4-26
4-1-5 TTP I/F	4-39
4-1-6 TTP DRIVER	4-44
4-1-7 HEAD AMP	4-50
4-1-8 FRONT I/F	4-55
4-1-9 SUB DRIVER PCBA	4-57
4-1-10 CONTROL SW	4-59
4-1-11 OPERATE SW	4-61
4-1-12 FM AMP	4-63
4-1-13 CAL/MEMO	4-70
4-1-14 MAIN MPU	4-76
4-1-15 MOIRE AMP PCBA	4-93
4-1-16 AMP MOTHER BOARD	4-95
4-1-17 CONTROL MOTHER BOARD	4-100
4-1-18 SUB MOTHER BOARD AND TTP ASS'Y	4-104

Table of Contents -2

	Page
4-2 Check and adjustment - Electrical -	4-106
4-2-1 Adjusting the CAL/MEMO PCBA	4-107
A) Adjusting the CAL circuit	4-107
B) Adjusting the MONITOR COMP circuit	4-107
4-2-2 Adjusting the MAIN MPU PCBA	4-109
A) Adjusting the D/A converter	4-109
B) Adjusting the A/D converter	4-109
C) Adjusting the digital voltmeter	4-110
D) Adjusting the clock	4-110
4-2-3 Adjusting the FM AMPLIFIER	4-112
A) Adjusting the recording section	4-112
B) Adjusting the reproduction section	4-113
C) Adjusting the erase trap	4-114
4-2-4 Adjusting the BIAS MIXER PCBA	4-116
A) Adjusting the erase section	4-117
B) Adjusting and checking the recording section	4-117
4-2-5 Adjusting the DISPLAY MPU PCBA	4-119
A) Zero point	4-119
B) Level	4-119
C) Zero point (for the MONITOR)	4-119
4-2-6 Adjusting the ID BOARD	4-120
A) Adjusting the ID gain	4-120
4-2-7 Adjusting the TTP CONTROL PCBA	4-122
A) Adjusting the MOIRE SERVO circuit (Wow /Flutter)	4-122
B) Adjusting tape servo circuit	4-124
4-2-8 Adjusting the TTP/IF PCBA	4-126
A) Adjusting the BOT sensor output	4-126
B) Adjusting the EOT sensor output	4-126
C) Adjusting the reel pulse sensor output	4-126
4-2-9 Adjusting the TTP DRIVER PCBA	4-128
A) Adjusting supply reel-side tape tension	4-128
B) Adjusting takeup reel-side tape tension	4-128
SECTION 5 MECHANICAL	5-1
5-1 Exploded view and parts list	5-1
5-2 Check and adjustment - Mechanical -	5-12
5-2-1 How to dismount the tape transport unit with caution	5-12
5-2-2 How to place the tape transport unit in loading state without inserting a cassette	5-14
5-2-3 Replacing the major parts (Assemblies)	5-15
A) Parts to be replaced at overhall	5-15
B) Replacing the belt	5-15
C) Replacing the pinch roller	5-15
D) Replacing the bearings	5-16
E) Replacing the magnetic head assembly	5-17
F) Replacing the capstan motor	5-17
G) Replacing the reel motor	5-18
H) Replacing pinch roller motor elevator ass'y	5-19
I) Replacing the loading DC motor	5-20
J) Replacing the tension arm	5-21

	Page
5-2-4 Check and adjusting the tape transport unit	5-22
A) Micro-switches location and operation	5-22
B) Description of micro-switches operation	5-25
5-2-5 Pinch roller pressure	5-25
5-2-6 Check and adjusting tape running state	5-26
A) Guide roller height adjustment	5-26
B) Checking tape running	5-26
5-2-7 Brake torque	5-27
5-2-8 Checking the tape transport unit	5-28
A) Tape run test	5-28
B) Tape speed	5-28
C) SN ratio	5-28
D) Frequency response	5-28
E) Skew (Dinamic/static)	5-30
F) Capstan belt tension	5-30
G) Wow and flutter	5-30
SECTION 6 TROUBLESHOOTING	6-1
6-1 Flowchart of defective running	6-1
6-2 Flowchart of defective recording/reproduction	6-2
SECTION 7 PARTS ORDERING INFORMATION	7-1
7-1 Assembling hardware coding list	7-2
SECTION 8 OPTION	8-1

Digitized by the Internet Archive
in 2025

https://archive.org/details/manualsplus_07093

SECTION 1

GENERAL DESCRIPTION

1-1 Specifications
1-2 Block diagram -Overall -
1-3 Dimensions XR-5000/7000

SECTION 1
GENERAL DESCRIPTION

The TEAC XR-5000/7000 Cassette Data Recorders are magnetic tape recording units that can record and reproduce 14 tracks (for XR-5000) or 21 tracks (for XR-7000) of measurement data simultaneously on or from VHS cassette tape (EIAJ 12.7 mm wide). Either the FM, DR, or PCM recording method is possible.

For FM recording, a recording frequency band confirming to IRIG WBG-I and TEAC's High Band are provided. Recording in High Band offers a band twice as wide as that of IRIG WBG-I. The use of T-120 tape (246m long) allows five hours and 44 minutes of recording and reproduction time at a tape speed of 1.2cm/s. In FM recording (WBG-I) and DR (direct recording), the XR-5000 and XR-7000 are compatible with the TEAC XR-50/70 and XR-510/710 Cassette Data Recorders.

The XR-5000 and XR-7000 provide a large multidisplay. Parameters can be set interactively. A bar graph of all channels including an announce channel and a two-channel waveform of external input can be monitored on the multidisplay.

With the ID information recording/reproduction function, ID information can be written onto the tape in real time, and output when the recorded data is reproduced.

The XR-5000/7000 supports the auto-range function, auto-clear function, self-test function, and search function.

The optional GP-IB interface (AR-507) with an A/D converter enables data recorded on tape to be transferred to a personal computer via the GP-IB cable connected to the computer and the XR-5000/7000. This allows the personal computer to control the XR-5000/7000. Parameters, ID information, and waveforms can be printed on the optional printer unit (PT-50).

1-1 SPECIFICATIONS

Record and Reproduce System:	FM WIDEBAND GROUP 1/HIGH BAND (standard) DR intermidiate band (option) PCM (option)
Tape:	EIAJ standard magnetic VHS video-cassette tape (maxell T-120HGX tape recommended may not satisfy specifications.)
Number of Tracks:	XR-5000: 14 + 1 (Edge) XR-7000: 21 + 1 (Edge)
Number of Channels:	XR-5000: 14 + 1 CH-13 DATA/ID/MEMO CH-14 DATA/Noise compensation/ tape servo CH-15 MEMO XR-7000: 21 +1 CH-11 DATA/Noise compensation/ tape servo CH-21 DATA/ID CH-22 MEMO
Head Configulation:	record/reproduce; 1 each erase full track; 1 piece REV side as option
Control:	transport control: push button switch F.R/REV/STOP/FWD/F.F/REC
Search Control:	high speed search by reproducing of EVENT No./TC CODE/TIME CODE high speed search by tape counter
Tape Speed Deviation:	±0.2% or less
Flutter (IRIG 118-73):	76.2cm/s (30 ips) 0.25%p-p 38.1cm/s (15 ips) 0.25%p-p 19.05cm/s (7-1/2 ips) 0.3% 9.52cm/s (3-3/4 ips) 0.4%p-p 4.76cm/s (1-7/8 ips) 0.5%p-p 2.38cm/s (15/16 ips) 0.6%p-p 1.19cm/s (15/32 ips) 1.0%p-p

Start/Stop time:	3 seconds (approx.)
Fast Forward/Fast Reverse Time:	5 minutes (approx.) with 246 m (807 ft) tape
Input:	impedance: 1 M ohm unbalanced (FM) 100k ohm unbalanced (DR)
Output:	voltage: ±0.1, 0.2, 0.3, 0.5, 0.7,1, 1.4, 2, 3, 7, 10, 14, 20, Vp 14 steps
	impedance: 75 ohm unbalanced FM 75 ohm unbalanced DR
	voltage: ±0.1, 0.2, 0.5, 1, 1.4, 2, 3, 5, Vp 8 steps (FM, DR 100K ohm load)
Input Zero Shift:	current: 20 mA (FM 20 ohm load)
Input Level Shift:	±100%, 0.125% step (electronic switch)
Output Zero Shift:	±20V (TRIMMER)
	±100% 0.125% step (electronic switch)

Frequency response, SN ratio, record and reproduce time :

Tape speed (cm/s)	FM frequency response (+0.5, -1 dB)	FM S/N ratio (dB)	DR frequency response (±3dB)	DR S/N ratio (dB)	Record reproduce time With 246m (807 ft) tape
76.2	*DC-40kHz DC-20kHz	47 50	200Hz - 150kHz	32	5 minutes (approx.)
38.1	*DC-20kHz DC-10kHz	47 50	100Hz - 75kHz	32	10 minutes (approx.)
19.05	*DC-10kHz DC-5kHz	47 50	100Hz - 37.5kHz	32	21 minutes (approx.)
9.52	*DC-5kHz DC-2.5kHz	46 48	100Hz-18.75kHz	32	43 minutes (approx.)
4.76	*DC-2.5kHz DC-1.25kHz	44 47	100Hz - 9.3kHz	32	1 hour & 26 minutes (approx.)
2.38	*DC-1.25kHz DC-625Hz	42 46	100Hz - 4.69kHz	32	2 hour & 52 minutes (approx.)
1.19	*DC-625Hz DC-313Hz	40 42	100Hz - 2.3kHz	32	5 hour & 44 minutes (approx.)

NOTE: * Shows response of FM HIGH BAND (WIDE BAND GROUP 1 x 2)

Distortion (IRIG 118-73):	FM WIDEBAND GROUP 1:	2.0% or less (1/2 fc)
	FM HIGH BAND:	3.0% or less Second harmonic distortion (1/2 fc)
	DR:	1.0% Third harmonic distortion (1/10 fc) at 76.2cm/s (30 ips)
Crosstalk (IRIG 118-73):	below noise level of each channels	
Linearity (IRIG 118-73):	±0.5%	
Drift (IRIG 118-73):	±0.5% After 15 minutes, warm up by running one tape	
Calibration Voltage:	DC:	±100%, 0%
	AC:	100%, 0% 250Hz less than 4.76cm/s (1-7/8 ips) 1kHz over 9.52cm/s (3-3/4 ips)
	Auto:	auto cal programmable (all channel simultaneous)
Operating Conditions:	0°C - 40°C (32°F - 104°F)	
Temperature and Humidity:	20% - 80% RH (non-condesation)	
Vibrations:	MIL-STD-810C Test method TABLE 514,2-VI	
Shock:	MIL-STD 30 G-11ms	
Power Requirement:	90 - 250V AC (50 - 440Hz) 11 - 30V DC (for AC/DC)	
Power Consumption:	XR-5000:	8.5A (approx.) at 12V DC
	XR-7000:	9A (approx.) at 12V DC
Dimensions (W x H x D):	XR-5000 and XR-7000; 440 x 220 x 300mm (17-14" x 8-3/4" x 11-3/4") approx. Excluding projections	
Weight:	XR-5000:	18.5kg (40 lbs. 11 oz.) approx.
	XR-7000:	19.5kg (42 lbs. 14 oz.) approx.

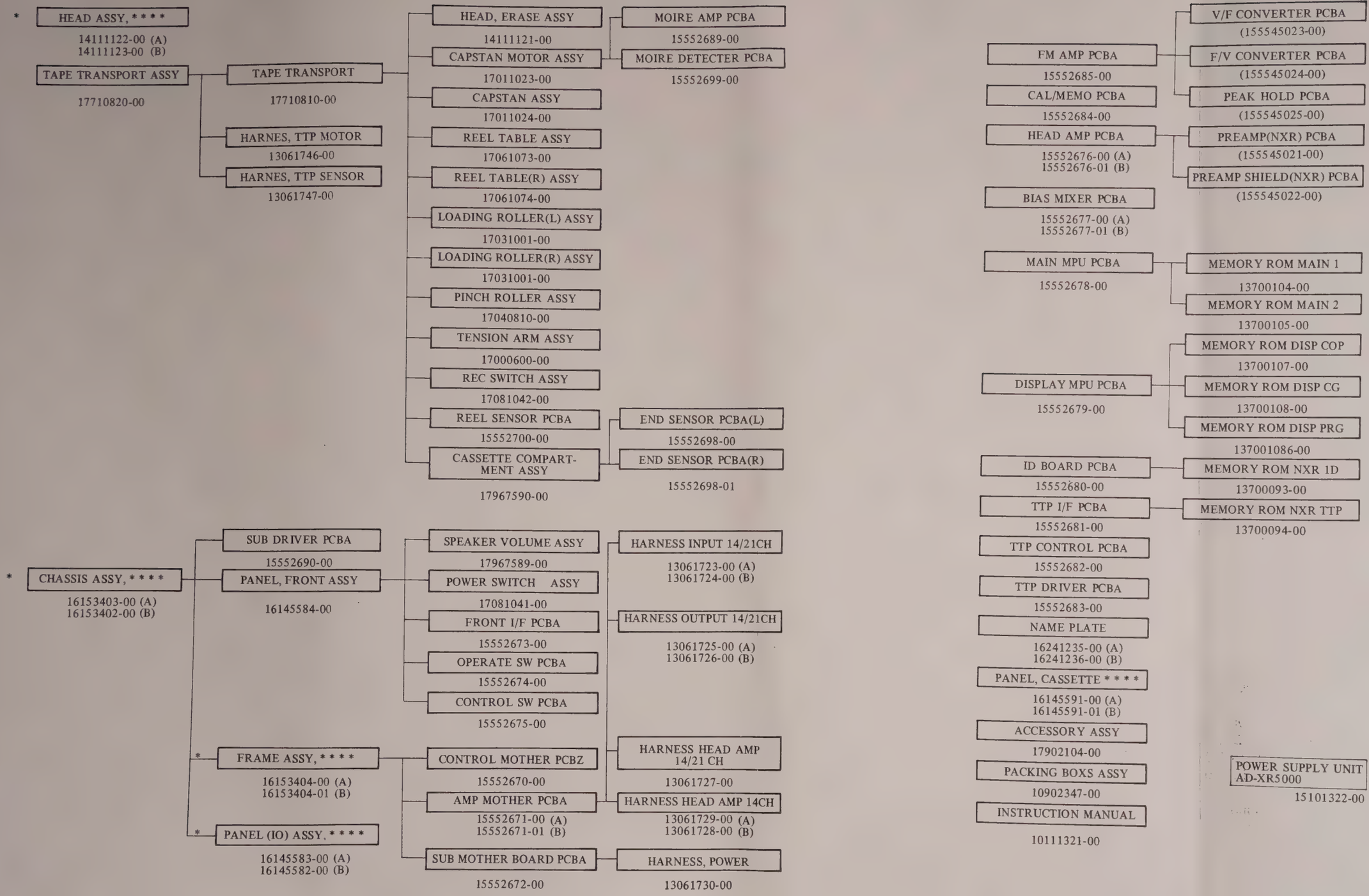

NOTE: Indicated (A) and (B) for following unit.
A for XR-5000
B for XR-7000

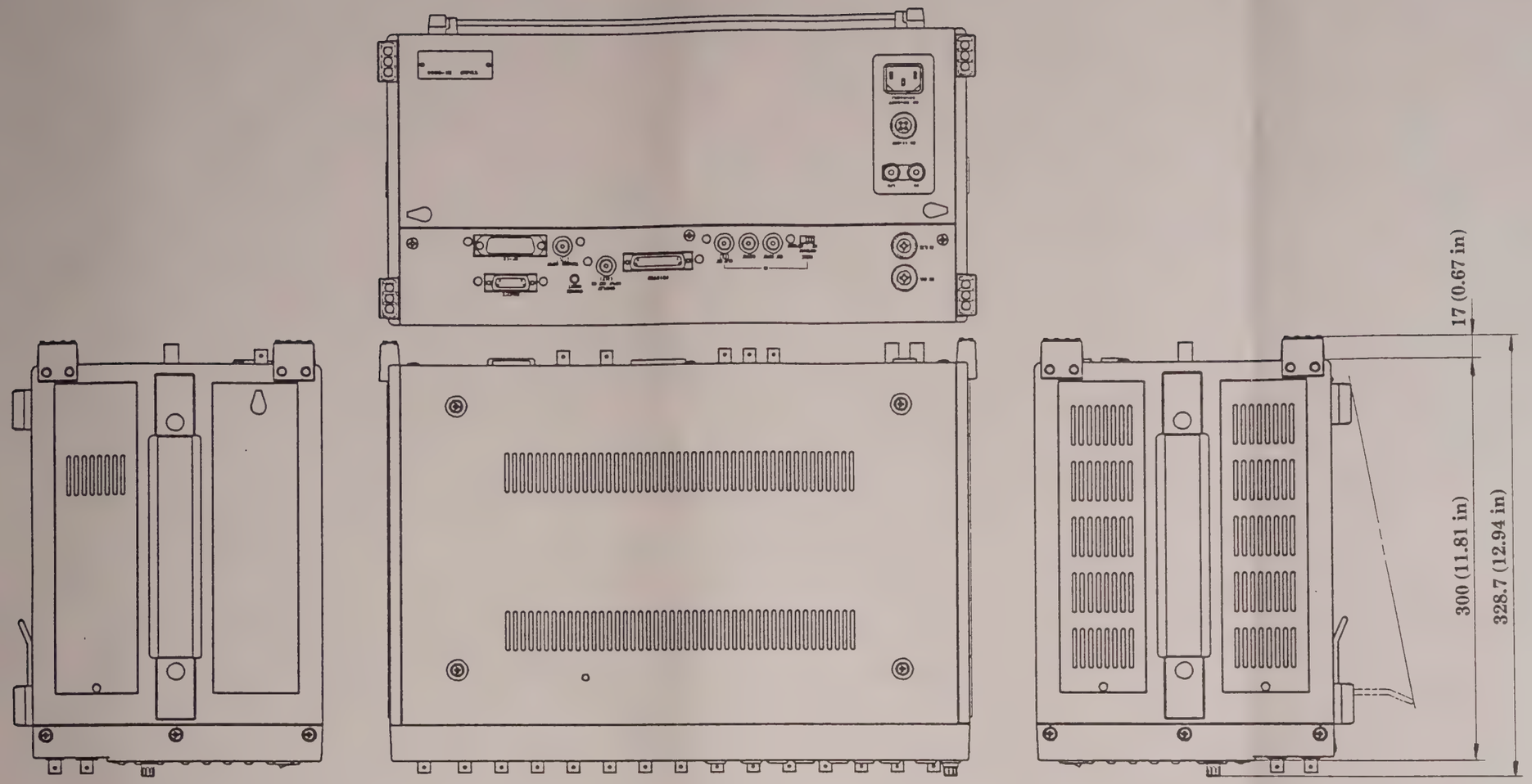
17 (0.67 in)
300 (11.81 in)
328.7 (12.94 in)

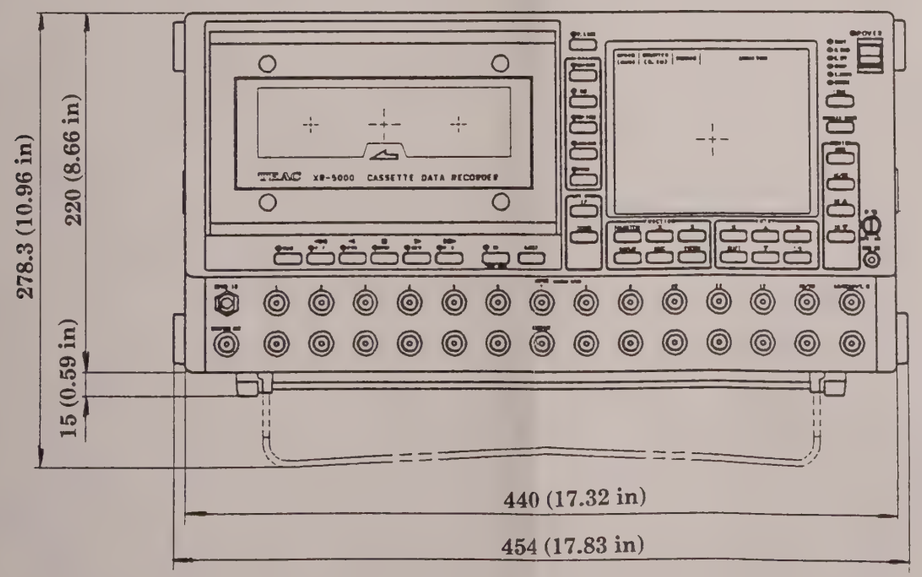
TEAC XR-5000 CASSETTE DATA RECORDER
278.3 (10.96 in)
220 (8.66 in)
15 (0.59 in)
440 (17.32 in)
454 (17.83 in)

Unit = mm (inch)

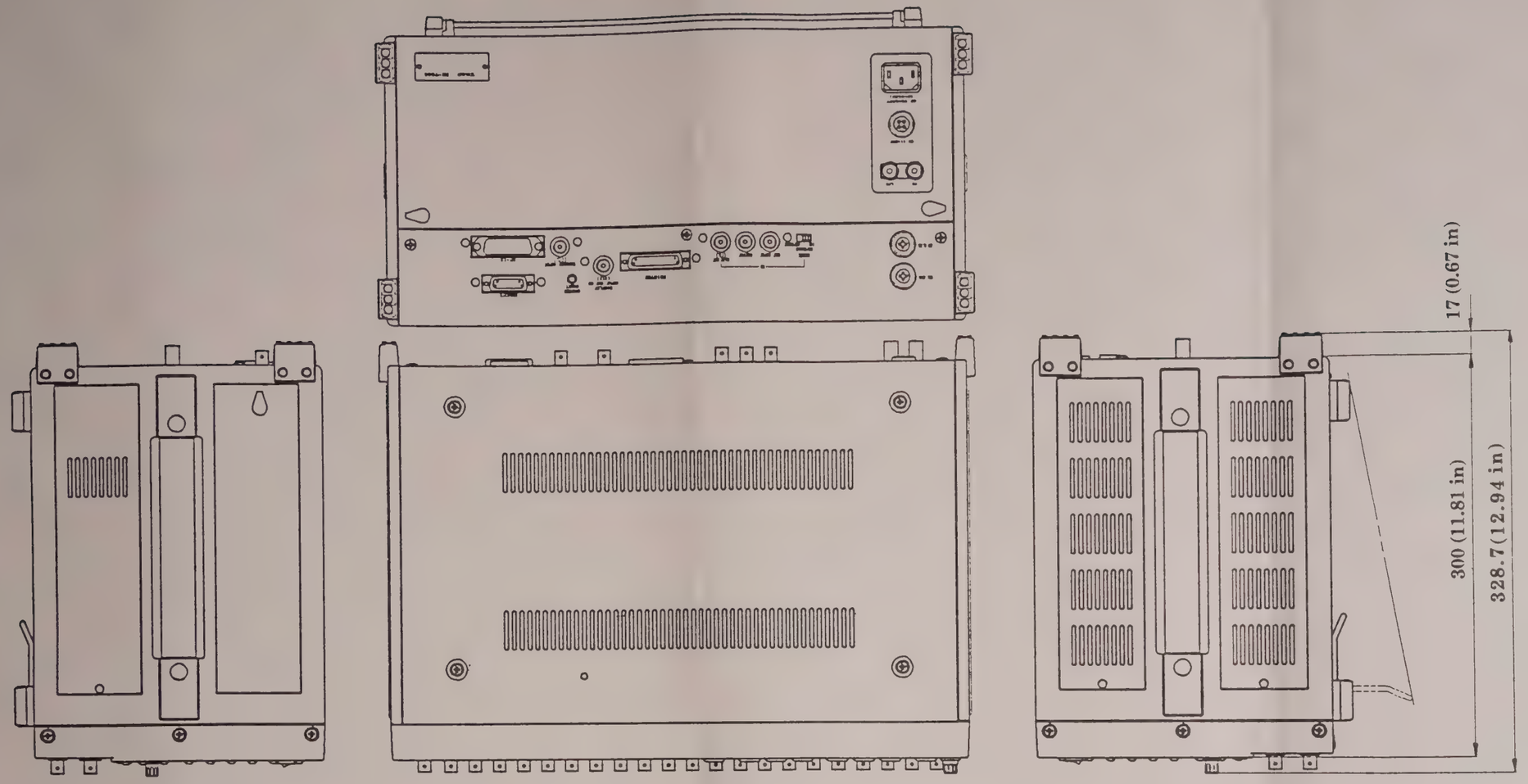
17 (0.67 in)
300 (11.81 in)
328.7 (12.94 in)

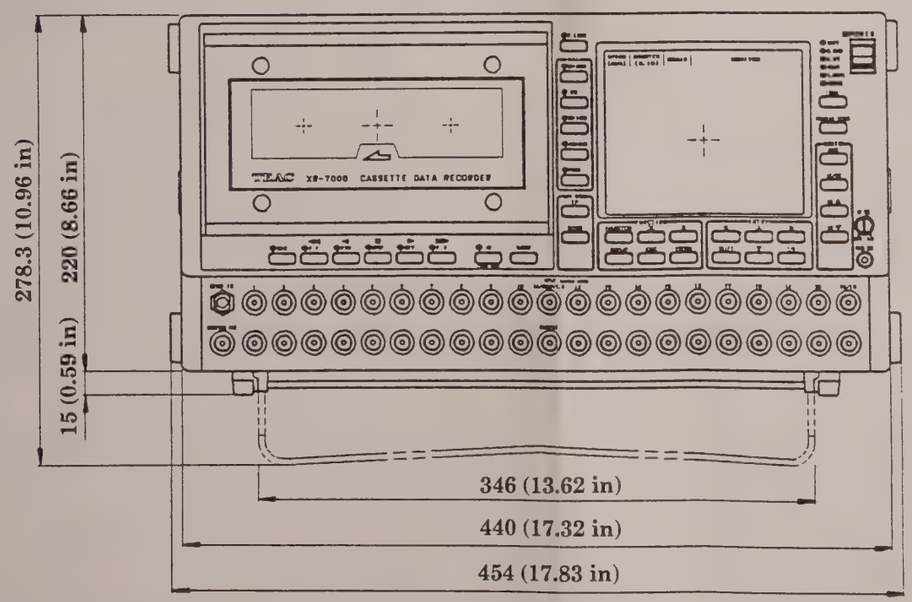
TEAC XR-7000 CASSETTE DATA RECORDER
278.3 (10.96 in)
220 (8.66 in)
15 (0.59 in)
346 (13.62 in)
440 (17.32 in)
454 (17.83 in)

Unit = mm (inch)

SECTION 2

EQUIPMENT REQUIRED/ACCESSORIES

2-1 Measuring instruments (for mechanical)
2-2 TEAC extension cards
2-3 Tools and Jigs (for adjusting the tape transport)
2-4 Measuring and testing instruments
2-5 Accessories

SECTION 2
EQUIPMENT REQUIRED/ACCESSORIES

A minimum of the following tools and test instrument are required for measuring and testing to obtain optimum performance.
If any test instrument listed here is not available, a close equivalent can be used.

2-1 MEASURING INSTRUMENTS (for Mechanical)

• Dual trace oscilloscope:	General use
• Signal generator:	Frequency range of 10Hz to 1MHz, Output voltage of 3V at 600 ohms, distortion factor of less than 0.1%
• RMS voltmeter (HP Corp. 3400A or equivalent):	Input range of -80 dB to +40 dB, input impedance of 1M ohm
• Frequency counter:	Frequency range of greater then 1MHz, Input sensitivity of better than 0.01V.
• Digital voltmeter:	Input sensitivity of better than 0.1mV
• Wow/flutter meter:	Peak-detection type (ex. Data check 8300B-W)

2-2 TEAC EXTENSION CARDS

Extender for REC/REP AMP	P/No. 15552648-00
Extender for ID board	P/No. 15552649-00
Extender for MAIN MPU board	P/No. 15552650-00
Extender for DISPLAY MPU board	P/No. 15552651-00
Extender for GP-IB board	P/No. 15552652-00
Extender for BIAS AMP	P/No. 15552653-00
Extender for TTP board (all)	P/No. 15552654-00
Extender for CAL/MEMO AMP	P/No. 15552705-00

2-3 TOOLS AND JIGS (for adjusting the tape transport)

PARTS NO.	NAME	USE
*17853682-00	Square gauge	Checking capstan shaft for right angle
*17853684-00	Tape height gauge	Checking height of tape running in loop
☆17850735-00	Height gauge	Checking height of tape running outside loop
16757460-00	Standard base	Head base
17853968-00	Tension gauge	Adjusting tension servo
17853969-00	Reel height gauge	Adjusting reel table height
17853970-00	Square and height gauge	Checking height and angle of roller and guide
17854563-00	Sensor extension cable	Checking microswitch operation
17854565-00	Motor extension cable	Checking reel motor operation
17854564-00	Capstan motor extension cable	Adjusting capstan motor
#17854566-00	Reproduction head extension cable 1	Adjusting reproduction head channels 1 to 4
#17854567-00	Reproduction head extension cable 2	Adjusting reproduction head channels 5 to 10
#17854568-00	Reproduction head extension cable 3	Adjusting reproduction head channels 11 to 16
#17854569-00	Reproduction head extension cable 4	Adjusting reproduction head channels 17 to 21
16960063	Tension gauge (2 kg)	Checking pinch roller pressure
16960067	Torque dia. gauge (0-300 g-cm)	Checking brake torque
17853693-00	Brake torque jig	Checking brake torque
16960095	Tentelo meter	Checking tape-tension
14802131	Test tape	Checking tape speed

NOTE: * Jigs used in common to all TEAC XR series data recorders.
☆ Jig used in common to all TEAC SR series data recorders.
Marks are not used in this manual.

2-4 MEASURING AND TESTING INSTRUMENTS-1

No.	Instruments	Specifications	Instruments for internal use		use
			Manufacture name	Model number	
1	Oscilloscope	Dual trace, 20 MHz or more	Matsushita (Panasonic)	VP-5512 VP-5511 VP-5234	1. Skew and other item for wave fom check
2	Oscillator	Output of sine wave. Output: 3Vp-p or more. Distortion ratio: 0.1% or less. Frequency: 10Hz to 300kHz or more. Output of rectangular wave. Output: 3Vp-p or more. Frequency: 10Hz to approx. 100kHz.	NF KROHN-HITE	SY-126 Model-4100	1. Skew (for rectangular wave check). 2. Distortion ratio 3. Crosstalk 4. Frequency response 5. External AC source
3	AC voltmeter, RMS meter	Indication of effective value. Frequency response: 3Hz to 20MHz. Range: 1mVrms to 300Vrms. Input impedance: 1M ohm or more. Precision: ±3% (Full-scale)	HP RMS meter	3400A	1. S/N ratio check 2. Closstalk 3. Frequency response 4. AC output voltage 5. Other items for AC voltage measurement.
4	Digital voltmeter (DVM) for DC voltage	4 to 5.5 digits Range: ±0.000mV to ±300V or more Input impedance: 1M ohm Precision ±0.07% ±2-8 digit	Advantest	TR-6875	1. Offset/gain adj. 2. DC output voltage 3. Other items for DC voltage measurement
5	Frequency counter	Frequency: Up to 1 mHz About 6 digits Periodic measurement is enabled. 1/1000 Hz can be measured. Input impedance: Approx. 1 M ohm	Advantest	TR-5821	1. Clock period measurement. 2. Center frequency/ modulation facter adjustment. 3. Other items for frequency check. 4. Tape speed check.

Measuring and testing instruments-2

No.	Instruments	Specifications	Instruments for internal use		use
			Manufac-turer name	Model number	
6	DC voltage generator	Output voltage: ±0.000V to ±10.000V	Takeda	TR-6141	1. Center frequency/ modulation factor. 2. External DC sourece
7	FFT	Frequency range: 1 to 100kHz. Dinamic range: 80 dB. Resoluation: 1% or better	TEAC	F-4000	At measurement of distortion factor
8	Wow/flutter meter	Shall conform to IRIG standards	Data check	8300B-W	Wow/flutter adjustment
9	0.6 cm adapter for wow/flutter meter		TEAC		Wow/flutter adj. This adapter is used tape speed of 2.4 cm/s or less together with a wow/flutter meter.
10	Tentelo-meter	0 to 500 g	TENTEL CORP. (Kawamura Denki kenkyu-jo)	T2-H20-1	Tape tension adjustment

Items	Parts No.	XR-5000	XR-7000
Video cassette T-120 HGX	14802127	1 set	1 set
Input/output cords	15920200-00	29	43
Power cords (for AC with adaptor and DC)	AC: 15922179 Adaptor: 13150152-00 DC: 15921270-00	1 each	1 each
Microphone	15990460-00	1	1
Earphone	15990330	1	1
Fuse AC: 6.3A DC: 2.5A	13291632 13291872	1set	1 set
Hexagonal wrench	16900001	1	1
Hexagonal wrench (4mm)	16910008	1	1
Small screwdriver	16910068	1	1
Screwdriver support	16771050-00	1	1
Cleaner kit TZ-350	17930220-00	1	1
Label (for frequency band)	10022499-00	1	1
Label (for cassette)	10022050-00	1	1
Vinyl cover	10992062-00	1	1
Accessory storage card	16110031-00	1	1
Test report		1	1
Instruction manual		1	1
Extension cards		1 set	1 set
Extension cables		1 set	1 set

SECTION 3

SCOPE

1. The specifications contained in this manual apply to the adjustment of the control circuits in the XR-5000/7000 Series Data Recorders.

2. These specifications do not apply to assembling and wiring of the control circuits, which are described in specific assembly drawings and manufacture specifications.

CIRCUIT DESCRIPTION

3-1 Servo system
3-2 FM AMP system
- 3-2-1 FM AMP recording system
- 3-2-2 FM AMP reproducing system

3-3 TTP control PCBA
- 3-3-1 Tape loading
- 3-3-2 Timing to stop tape loading
- 3-3-3 Excuting of an EJECT command

3-4 TTP I/F PCBA
- 3-4-1 Control commands
- 3-4-2 EOT/BOT sensor
- 3-4-3 Output data

3-5 Overall specifications chart

SECTION 3
CIRCUIT DESCRIPTIN

3-1 SERVO SYSTEM

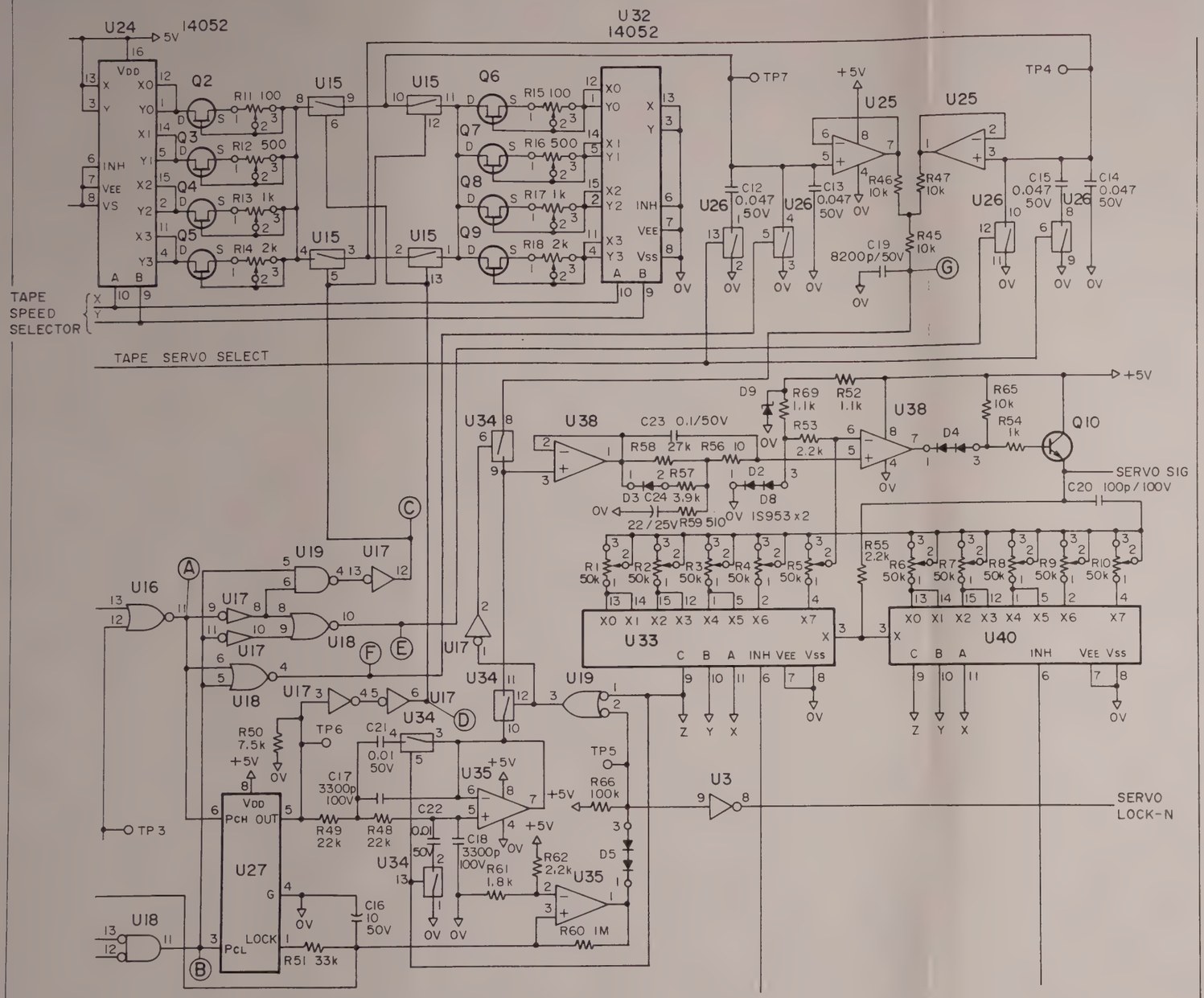

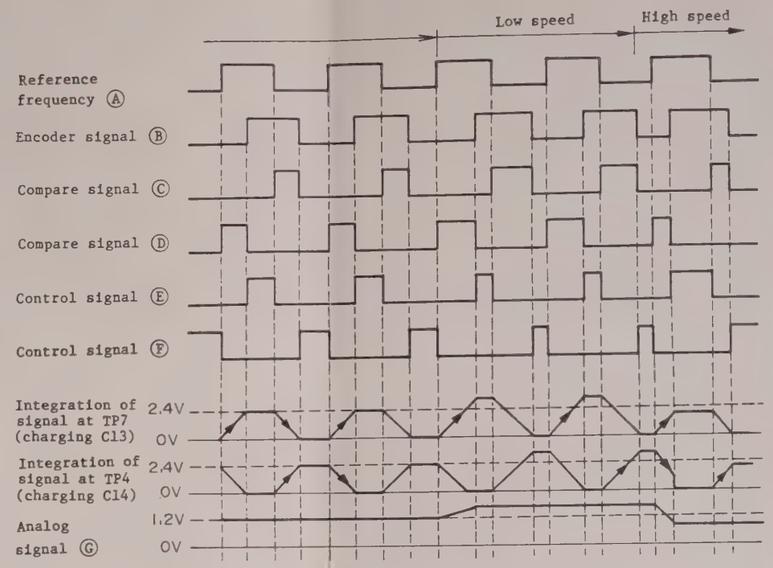

THEORY OF OPERATION 1 (TAPE RUNNING AT 4.8 TO 0.6 cm/s)

(1) Stopping tape

When tape speed is set to 4.8 cm/s, pins A and B of U24 and U32 are at low level, and analog switches X0 and Y0 are on. Under these conditions, Q2 and Q6 form a constant-current charge/discharge circuit. In addition, pins 10 and 11 of U34 are on and pins 8 and 9 of U34 are off.

(2) Starting tape

Control command FWD generates reference frequency Ⓐ at Ⓐ. Pin 5 (TP6) of U27 (PLL) goes high. The signal from pin 5 goes through filter U35, pins 10 and 11 of U34, then the servo drive circuit, thus causing the motor to run. When the motor reaches its constant rotational speed, encoder signal Ⓑ appears as shown above. The servo lock signal is generated to turn pins 10 and 11 of U34 off and pins 8 and 9 of U34 on. When compare signal Ⓓ goes high, pins 8 and 9 of U15 and pins 2 and 1 of U15 are turned on to charge C13.

When compare Ⓒ signal goes high, pins 3 and 4 of U15 and pins 10 and 11 of U15 are turned on to enable constant discharge current from C14 to pass Q6. When compare signal Ⓒ goes high, pins 3 and 4 of U15 and pins 10 and 11 of U15 are turned on to enable constant charge current for C14 to pass Q2. When compare signal Ⓓ goes high, pins 1 and 2 of U15 are turned on to discharge C14.

Arithmetical addition of the signals at C13 and C14 generates analog signal Ⓖ. This signal enters U38 (equalizer circuit).

THEORY OF OPERATION 2 (TAPE RUNNING AT 76 TO 9.5 cm/s)

When the tape speed is set anywhere between 76 to 9.5 cm/s, pins 10 and 11 of U34 are always on and pins 8 and 9 of U34 are always off, thus disabling analog signal Ⓖ. A signal at pin 5 (TP6) of U27 is identical to signal Ⓓ. As figure shows, its pulse width increases at lower tape speeds and decreases at higher tape speeds. This signal is integrated at U35 (filter), then sent to U38 (equalizer).

3-2-1 FM AMP Recording System

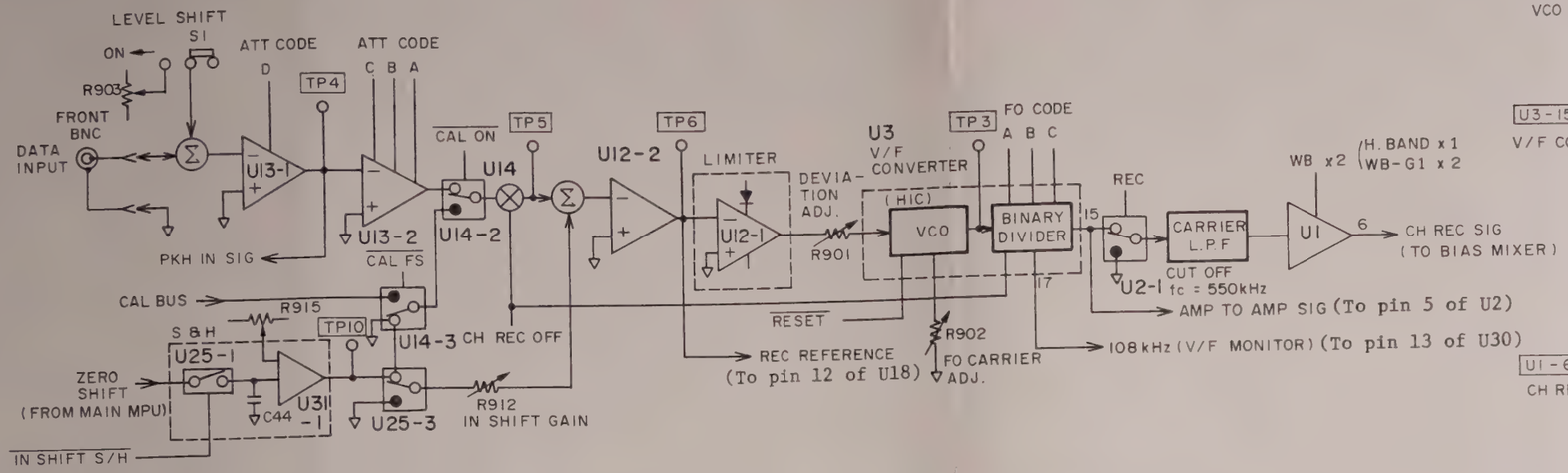

Waveform at each test point on high band at tape speed of 76 cm/s with CAL0

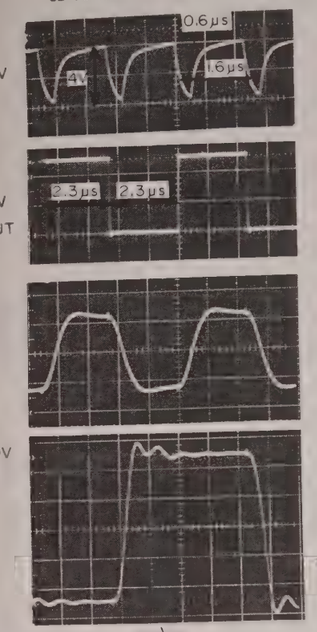

Input AMP

TP4 In response to input: Data X(-1) V for range of 0.1 to 1.4 V
Data X(-1/10) V for range of 2.0 to 20 V

TP5 ±1.0 V for input as large as ±100% (full-scale) of input range

TP6 ±1.0 V for input as large as ±100% (full-scale) of input range
(record reference point)

[Additional function]

Level shift

TP4 For input 0 V, S1=ON, and input range=20 V: Bar graph display +100% to +120%, -2 to -2.3 V with R903 turned fully counterclockwise, and bar graph display -100% to -120%, +2 to +2.3 V with R903 turned fully clockwise

Input zero shift

TP10 0 V (R915 adjusted) for input zero shift of 0% with CAL0

TP6 -1.5 V (R912 adjusted) for input zero shift of +150% with CAL0

TP6 +1.5 V (R912 adjusted) for input zero shift of -150 V with CAL0

[Supplement]

1. DATA/CAL input selector TP6

CH	CAL SEL	$\overline{\text{CAL ON}}$	$\overline{\text{CAL FS}}$	Zero shift	TP6 out
All channels if COMP is off	AC, DC	L	L	0 V	CAL bus
All channels except COMP channel if COMP is on	0	L	H	Enable	Zero shift
	Off	H	H	Enable	Data+ Zero shift
COMP channels if COMP is on	AC, DC 0, Off	L	H	(Enable) 0%*	Zero shift 0%

* Forcibly set to 0% by software.

2. Input range ATT code-gain

U13-2 ATT code C	B	A	Gain (X-1)	U13-1 ATT code D L: X-1	H: X-1/10
H	H	H	X0.5	Not use	20 V
H	H	L	X0.7	1.4 V	14 V
H	L	H	X1	1 V	10 V
H	L	L	X1.4	.0.7 V	7 V
L	H	H	X2	0.5 V	5 V
L	H	L	X3.33	0.3 V	3 V
L	L	H	X5	0.2 V	2 V
L	L	L	X10	0.1 V	Not use

3. PKH in SIG level becomes data X(-1/10) with input range set to 10 V during auto range.

4. When CH REC is off, DATA/CAL selector output is inhibited, and the impedance at TP5 becomes high (open state).

Modulator (V/F converter)

TP3 VCO out

f_0: 432 kHz at CAL0 (0% dev.)
f_+: 604.8 kHz at CAL+100% (+40% dev.)
f_-: 259.2 kHz at CAL-100% (-40% dev.)

Limiter check (±60% dev. to ±70% dev.)
691 to 734 kHz for +200% data input
130 to 173 kHz for -200% data input

U13-15PIN V/F converter HIC out

Speed (cm/s) WBGI	H.band	FO code C	B	A	V/F CONV. OUT CAR. (kHz) f_0	$f_{-40\%dev.}$	$f_{+40\%dev.}$
	76	H	H	H	216	129.6	302.4
76	38	H	H	L	108	64.8	151.2
38	19	H	L	H	54	32.4	75.6
19	9.5	H	L	L	27	16.2	37.8
9.5	4.8	L	H	H	13.5	8.1	18.9
4.8	2.4	L	H	L	6.75	4.05	9.45
2.4	1.2	L	L	H	3.375	2.025	4.725
1.2	0.6	L	L	L	1.6875	1.0125	2.3625

(H-BAND, TAPE SPEED AT 76cm/s CAL0)

U3-17PIN V/F monitor SIG.

For both high band and WBGI, V/F monitor signal at pin 17 of U3 is at 108 kHz for all speeds with f_0(CAL0).

[Supplement]

1. When CH REC is off, no carrier appears at pins 15 and 17 of U3.
2. A VCO deviation is controlled with R901.
3. A VCO FO carrier is controlled with R904 (R902).

REC AMP

U1-6PIN CH REC SIG OUT

CH REC SIG OUT at pin 6 of U1 is carrier out only for REC/FWD and REC/REV. For others, no carrier appears. The carrier frequency at this pin is the same as one at pin 15 of U3. The carrier level is twice as high as for WBGI and high band.

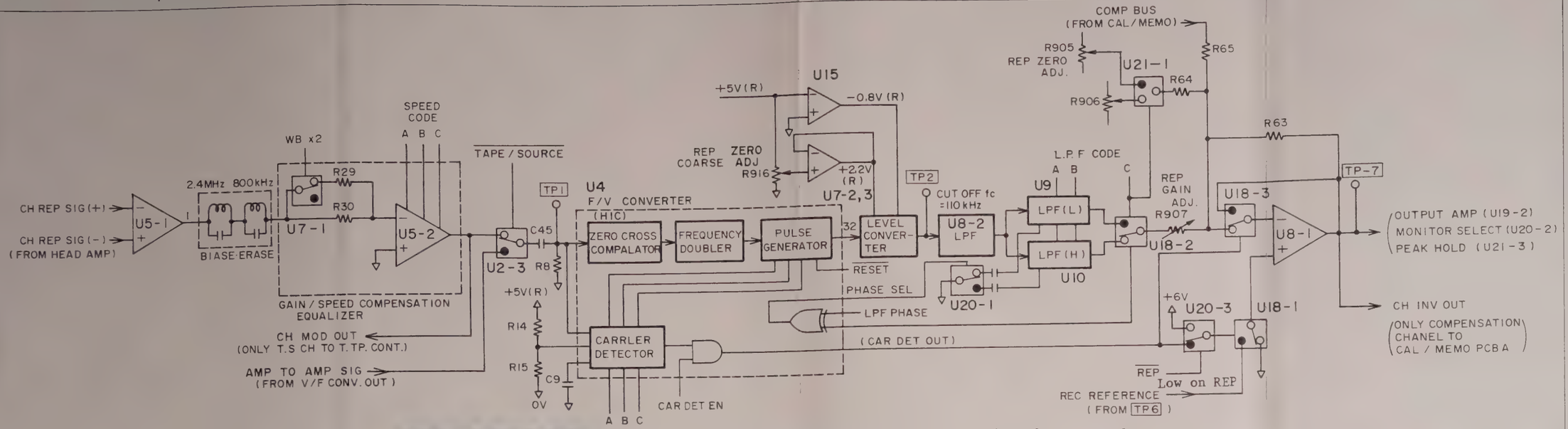

DIFFERENTIAL AMP
H. BAND 76 cm/s (REC/FWD)
CAL 0 216 kHz

U5-1 PIN 0V

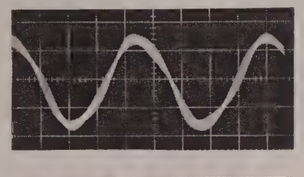

SPEED EQUALIZER AMP
H. BAND 76 cm/s (REC/FWD)
CAL 0 216 kHz

TP 1 0V
(REC / FWD)

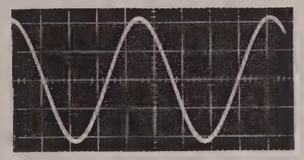

AMP TO AMP SIG
H. BAND 76 cm/s
CAL 0 216 kHz
CAL +100% 302.4 kHz
CAL −100% 129.6 kHz

TP 1 0V
(AMP TO AMP)

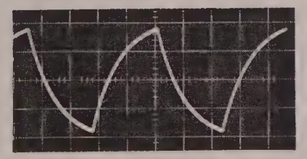

F/V CONVERTER OUT
H. BAND 76 cm/s
(REC/FWD)
CAL 0 432 kHz

U4 - 32PIN 0V

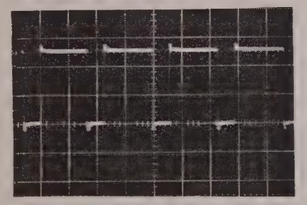

LEVEL CONVERTER
H. BAND 76 cm/s (REC/FWD)
CAL 0 432 kHz
CAL +100% 604.8 kHz
CAL −100% 259.2 kHz

TP 2 0V

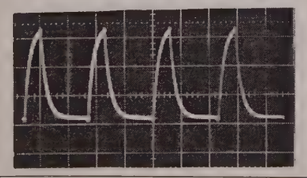

During AMP to AMP REC/FWD, the following signals appear at TP7 (reproduction reference point):

CAL 0	0 V	R905 U9 OFF SET ADJ. R906 U10 OFF SET ADJ. (coarse zero R916)
CAL+100%	−1 V	R907 GAIN ADJ.
CAL−100%	+1 V	

Relationships between tape transport and output at TP7

Tape transport		Carrier	CAR DET OUT	REP	TP7 out
REC, A to A		Presence	H	H	Data
REP			H	L	Data
REC, A to A		Loss	L	H	0 V
REP			L	L	REC referrence
CH REC OFF	REC, A to A	NON CAR.			0 V
	REP	Loss			REC referrence
		Presence			Data

For TS channel, whenever tape servo goes on, CAR DET EN goes low, then CAR DET OUT goes low.

For ID channel, whenever ID priority goes on, CAR DET EN goes low, then CAR DET OUT goes low.

[Supplement]

1. When compensation is on, CH INV OUT SIG X 1/5 is sent from CAL/MEMO PCBA via COMP bus to all channels other than COMP channel. It is then multiplied by −5 and added at U8-1.

2. Speed code - FO code - LPF code

WBGI				High band				V/F, F/V			V/F, F/V		LPF filter				LPF IC
Speed code			Speed	Speed code			Speed	f_0 code			CAR. f_0	CAR. f− −40% dev	CAR. f+ +40% dev	LPF code			BW*	
C	B	A	cm/s	C	B	A	cm/s	C	B	A	kHz	kHz	kHz	C	B	A	kHz	
				1	1	1	76	1	1	1	216	129.6	302.4	1	1	1	40	U10
1	1	1	76	1	1	0	38	1	1	0	108	64.8	151.2	1	1	0	20	
1	1	0	38	1	0	1	19	1	0	1	54	32.4	75.6	1	0	1	10	
1	0	1	19	1	0	0	9.5	1	0	0	27	16.2	37.8	1	0	0	5	
1	0	0	9.5	0	1	1	4.8	0	1	1	13.5	8.1	18.9	0	1	1	2.5	U9
0	1	1	4.8	0	1	0	2.4	0	1	0	6.75	4.05	9.45	0	1	0	1.25	
0	1	0	2.4	0	0	1	1.2	0	0	1	3.375	2.025	4.725	0	0	1	0.625	
0	0	1	1.2	0	0	0	0.6	0	0	0	1.6875	1.0125	2.3625	0	0	0	0.3125	

"1" = "H", "0" = "L" * 0 dB +0.5, −1.0 dB (input ⟶ output)

3. When LPF phase is high, phase is selected. At this point, frequency response at TP7 (LPF) is degraded by −9 db +3 db at cutoff frequency.

4. The level of a carrier at which the carrier can be detected to be present is determined by ratio of R15 to R14, that is:

$$5 \times \frac{R15}{R14 + R15} \text{ (V)}$$

The frequency of a carrier at which the carrier can be detected to be present is determined by C9 and FO code; for example, f_{min}=FO CAR x 0.2 for C9 = 0.0068 μF.

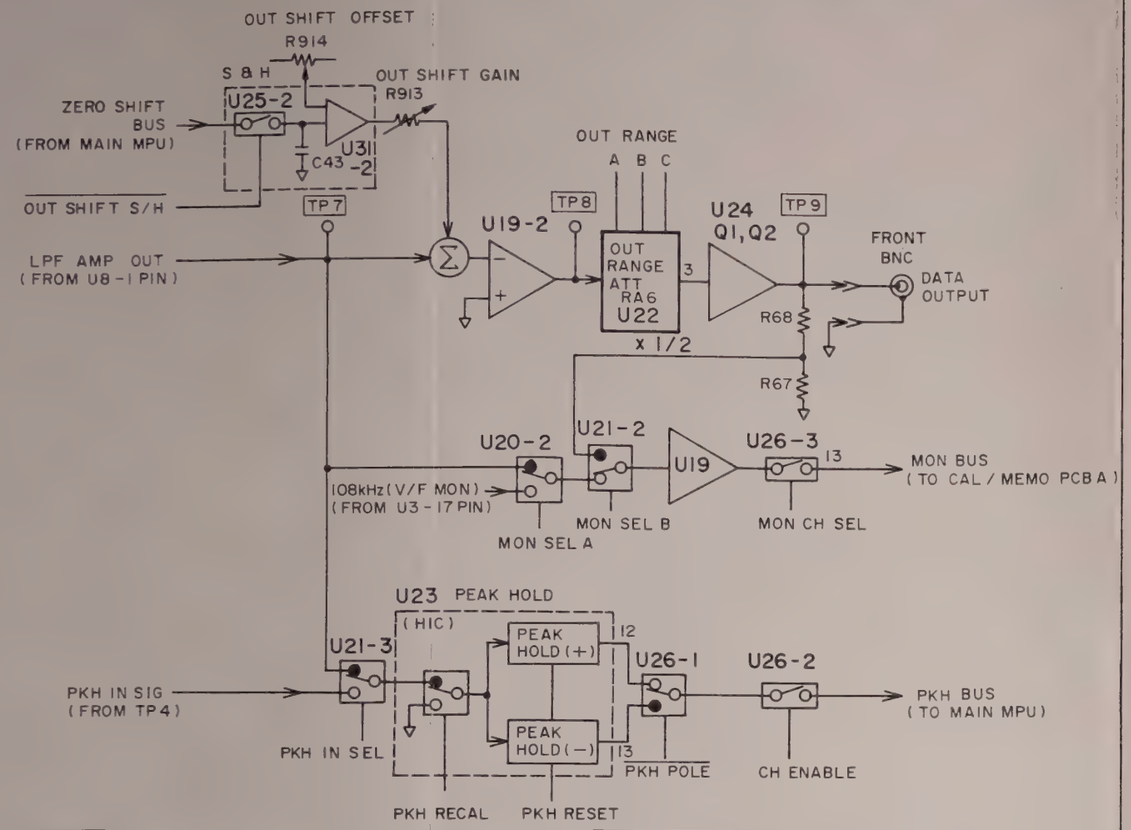

Output AMP

TP8 CAL0 0 V Zero adjustment is
CAL+100% +2 V possible with R914
CAL-100% -2 V (for out shift 0%)

Output from TP9 with CAL+100% selected at pin 3 of U22

Out range C	Out range B	Out range A	Gain	U22-3PIN out	TP9 output*
H	H	H	x1	2.0 V	5 V
H	H	L	x0.6	1.2 V	3 V
H	L	H	x0.4	0.8 V	2 V
H	L	L	x0.28	0.56V	1.4 V
L	H	H	x0.2	0.4 V	1.0 V
L	H	L	x0.1	0.2 V	0.5 V
L	L	H	x0.04	0.08 V	0.2 V
L	L	L	x0.02	0.04 V	0.1 V

* Output load impedance of 100 kΩ or greater

[Additional function]

Output zero shift

TP8 0 V (R914 adjusted) for output zero shift of 0% and input zero shift of 0% with CAL0

TP8 +3 V (R913 adjusted) for output zero shift of +150% and input zero shift of 0% with CAL0

TP8 -3 V (R913 adjusted) for output zero shift of -150% and input zero shift of 0% with CAL0

Monitor selector

U26-13PIN MON bus

	Select	MON SELA	MON SELB	MON CH SEL	U26-13PIN MON BUS SIG.
Monitor CH	Source /TEPE	L	H	H	TP7 out
	Output	X	L	H	TP9x1/2
	V/F MON	H	H	H	U3-17PIN (108 kHz)
Other CH	X	X	X	L	MON CH MON BUS SIG.

X: Don't care

Peak hold

U23-13PIN PKH (-)

CAL0, RECAL	+25 mV
CAL+100%	0 V
CAL-100%	-1.025 V

U23-12PIN PKH (+)

CAL0, RECAL	-25 mV
CAL+100%	-1.025 V
CAL-100%	0 V

[Supplement]

PKH RECAL: Goes high at power-on reset and remain high for approx. 0.9 seconds, during which the PKH bus initial value (0% point) is set up.

FM AMP Interface

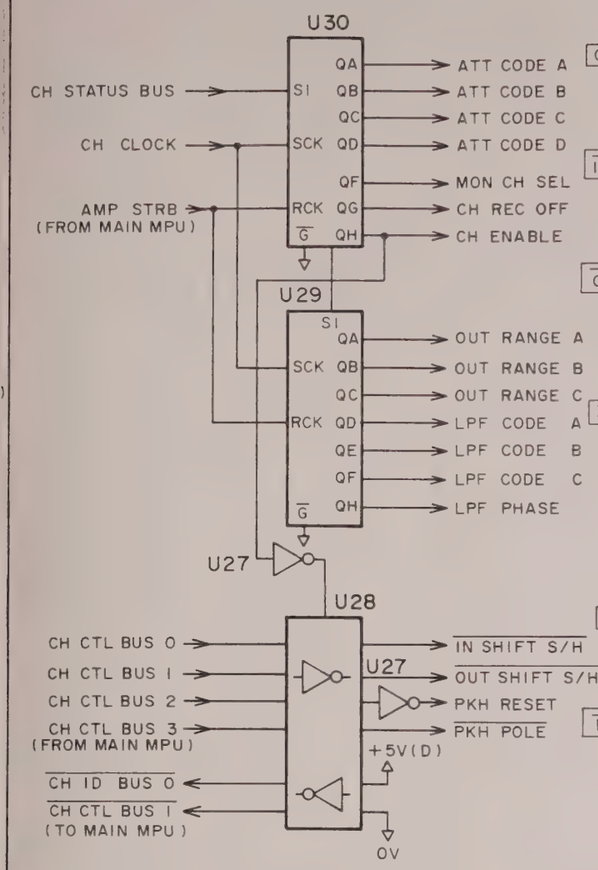

Control SIG. timing chart

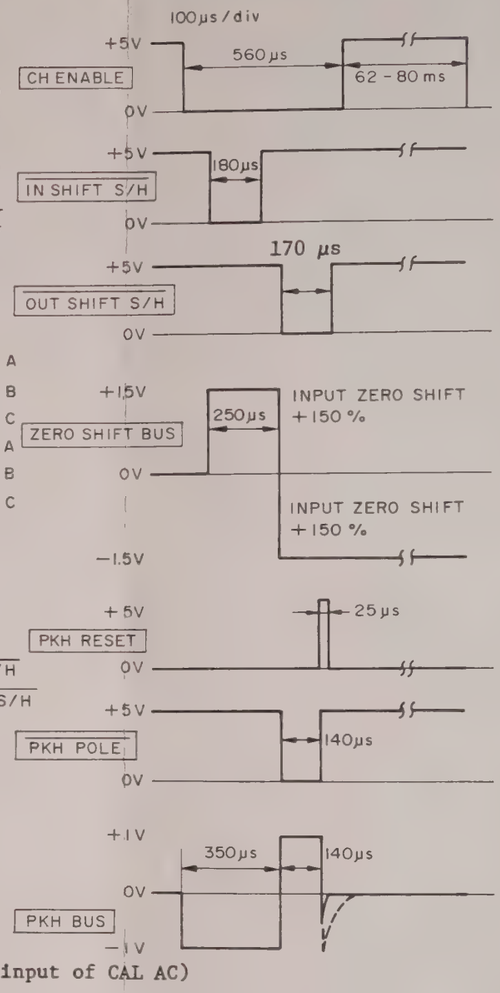

(At input of CAL AC)

Generation timing of CH enable for all channels

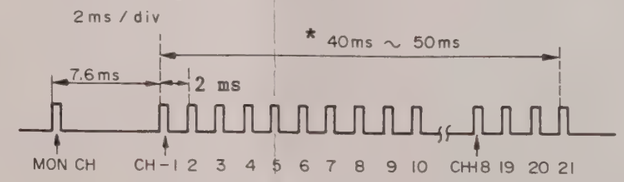

* This duration is not constant because the width of each CH enable pulse may increase due to software control.

3-3 TTP CONTROL PCBA

3-3-1 Tape loading

Tape will be loaded when all of the following conditions are met:
(1) a tape cassette is inserted in the cassette compartment,
(2) a STOP command has been executed,
(3) the tape cassette is in ready state (the cassette compartment is closed),
(4) the tape cassette is in lock state, and (5) the loading arm is in the initial position, provided that an eject operation has not been selected and power-on reset is not in effect.

- Tape loading timing chart -

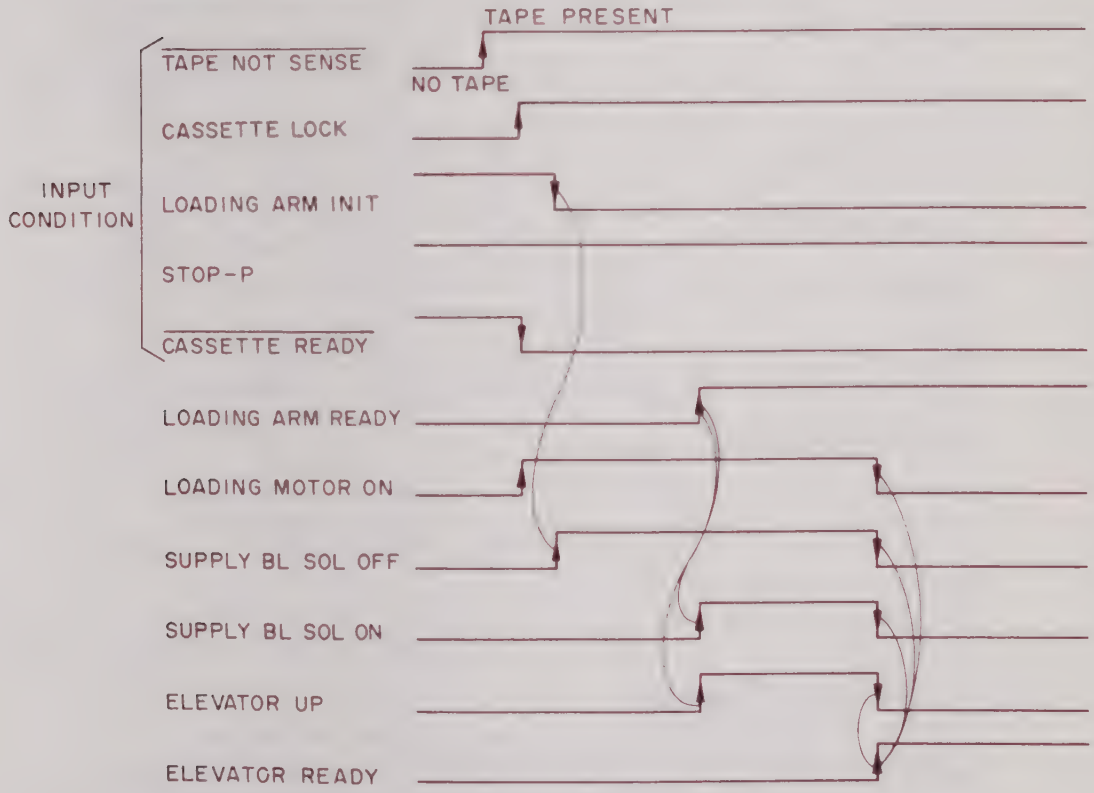

3-3-2 Timing to stop tape loading

Tape loading is aborted under the following conditions, and the next sequence is taken:

- The loading circuit is reset on reception of an EJECT or an UNLOAD command, and an eject or unload operation status.
- When the tape is being loaded, if power-on reset is effected, the tape is stopped immediately. After the power supply voltages have reached their ratings, issuing an EJECT command places the tape in the initial state.

3-3-3 Excuting of an EJECT command

An EJECT command can be executed if the both of the following conditions are met:
(1) the tape cassette is in ready state (the cassette compartment is closed) and(2) a STOP command has been issued (the tape is not running).

- EJECT execution timing cheart -

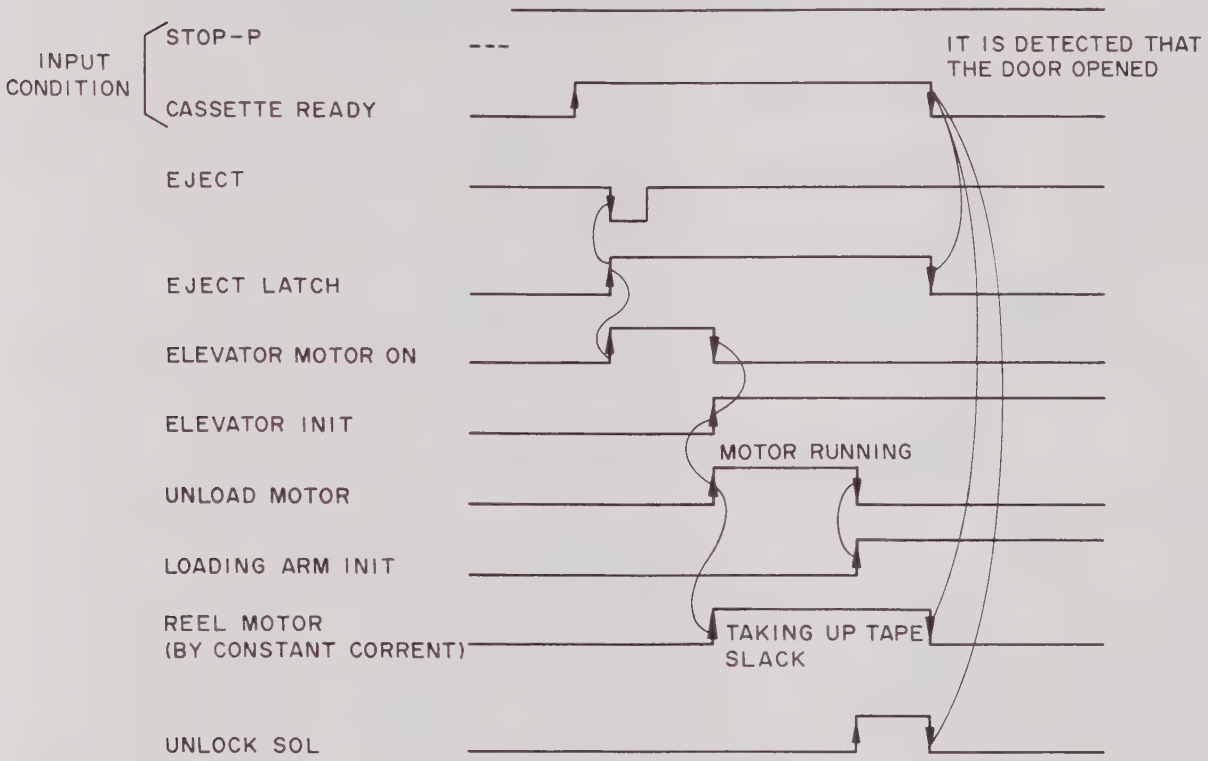

- **Incomplete EJECT operation**

When the loading arm sets in the initial position, the unlock solenoid is energized. If the cassette compartment does not open, an attempt to energize the unlock solenoid is made three times or so at intervals of approximately 0.5 seconds.
If the cassette compartment does not open yet, take out the tape cassette with your hand.

3-4-1 Control commands

The control system consists of six commands: FWD, REV, STOP, FFWD, FREV, and REC.

A mode can be selected with a control command. Transition from one mode to another involves motion sensing, which utilies the capstan encoder.

Modes

Present mode / Entered mode	FWD	REV	FAST FWD	FAST REV	STOP	REC FWD	REC REV
FWD		(FWD)	(FWD)	(FWD)	FWD		REC FWD
REV	(REV)		(REV)		REV	REC REV	
FAST FWD	FAST FWD	FAST REV		FAST FWD	FAST FWD	FAST FWD	FAST FWD
FAST REV	FAST REV	FAST REV	FAST REV		FAST REV	FAST REV	FAST REV
STOP	(STOP)	(STOP)	(STOP)	(STOP)		(STOP)	(STOP)
REC							

: No transition occurs from the present mode.

( ) : Motion sensing is involved.

(STOP): The pinch roller is released when the tape stops.

- **Operation of the control circuit at power-on**

  When power is applied, all internal registers are reset.
  If the loading arm and the elevator are in ready state, power-on reset enables acceptance of the control cammands. Otherwise, the FWD, REV, FF, F.REV, and STOP commands cannot be accepted.

- **Taking up tape slack**

  If the tape is slack when the loading arm and the elevator are in ready state, executing a STOP command supplies power to the reel motor for approximately 0.2 seconds to take up the tape slack.

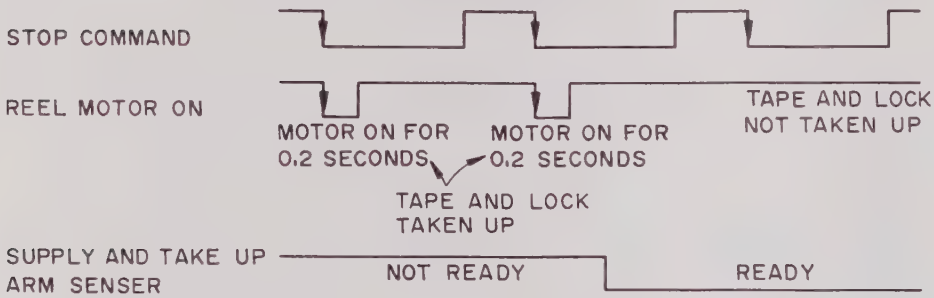

- **Detection of BOT/EOT condition**

  If an EOT/BOT condition is detected when the tape is running, a tape stop signal is generated to stop the tape, and the pinch rollers on both sides are reset at the same time.
  If an EOT condition exists, the FWD and the FFcommands cannot set the tape to run. If a BOT condition exists, the REV and the F.REV commands cannot set the tape to run.

3-4-2 EOT/BOT sensor

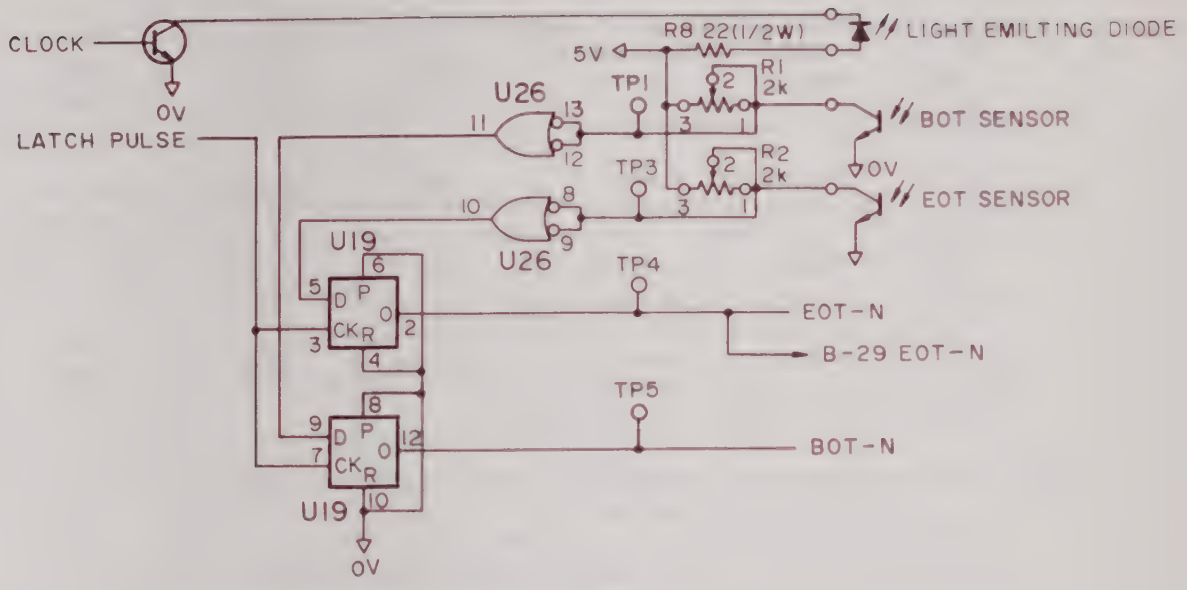

The BOT/EOT sensor circuit supplies a comaratively large current (200 mA) to the light emitting diode to cause it to flash so that the influence of any external light is minimized.

-Timing chart-

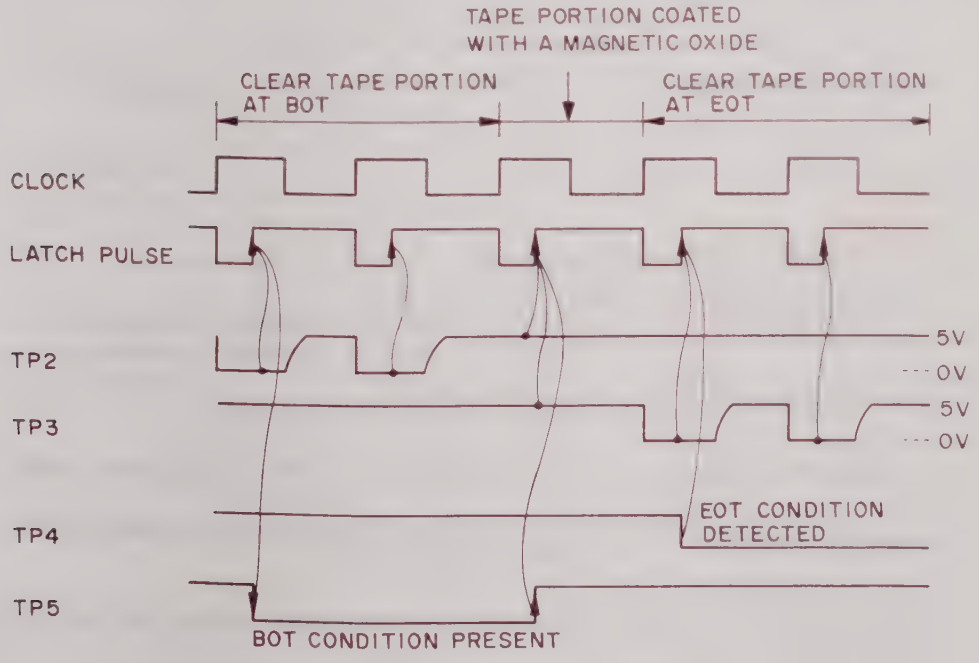

Data bus	PORT SELECT 0	PORT SELECT 1	PORT SELECT 2	PORT SELECT 3	PORT SELECT 4
Do 0	Cassette lock	Supply arm not ready	BOT	Servo lock	Remainder data D0
Do 1	Cassette ready	Take up arm not ready	EOT	Motion sense	D 1
Do 2	Rec enable	Supply P.R Sol. ON	Motor start	FWD	D 2
Do 3	Cassette tape ready	Take up P.R Sol. ON	Servo lock	REV	D 3
Do 4	Loading arm initioal	Supply B.L Sol. OFF	Tape not sense	FAST	D 4
Do 5	Loading arm ready	Take up B.L Sol. OFF	Over load	REP	D 5
Do 6	Elevator initial		Motion sense	Tape servo ON	D 6
Do 7	Elevator ready		1 cm/s data	2 cm/s data	D 7

- Output signals are active-low.

- Output signal names and description

1) Cassette lock: Generated when a tape cassette is inserted into the cassette compartment and engaged in the mechanism.

2) Cassette ready: Generated when the cassette compartent is closed.

3) Rec enable: Generated when the cassette tape is ready to record.

4) Cassette tape ready: Generated when the cassette tape is inserted into the cassette compartment.

5) Loading arm initial: Generated when the loading arm is in the initial position.

6) Loading arm ready: Generated when the loading arm is in the position where loading is completed.

7) Elevator initial:	Generated when the elevator is positioned downwards (initial position).
8) Elevator ready:	Generated when the elevator is positioned upwards (load completion position).
9) Supply arm not ready:	Generated when a tape slack occurs on the supply side.
10) Take up arm not ready:	Generated when a tape slack occurs on the takeup side.
11) Supply PR Sol. ON:	Generated when the pinch roller solenoid on the supply side is energized.
12) Take up PR Sol. ON:	Generated when the pinch roller solenoid on the takeup side is energized.
13) Supply BR Sol. OFF:	Generated when the brake solenoid on the supply side is deenergized to apply brake.
14) Take up BR Sol. OFF:	Generated when the brake solenoid on the takeup side is deenergized to apply brake.
15) BOT:	Generated when a beginning-of-tape condition is detected and when there is no tape cassette in the cassette compartment.
16) EOT:	Generated when an end-of-tape condition is detected and when there is on tape cassette in the cassette compartment.
17) Motor start:	Generated when a capstan motor start command is issued.
18) Servo lock:	Generated when the capstan motor reaches a constant regular speed.
19) Tape not sensed:	Generated when there is no tape cassette in the cassette compartment and if tape is broken when there is one in the cassette compartment.
20) Overload:	Generated when a current of 150 mA or greater flows through the loading motor.
21) Motion sensed:	Generated when the capstan motor is rotating.
22) 1-CM/S Data:	Kept to be on for the time during which the tape runs 1 cm.
23) 2-CM/S Data:	Kept to be on for the time during which the tape runs 2 cm.
24) Remainder indi. data:	Consisting of 8 bits (D0 to D7) representing PROM contents in percentage as list in next page.

3-5 OVERALL SPECIFICATIONS CHART-1

The specifications contined in this charts apply to complete adjusted unit for factory.

Item	Specification	Check point	Measurement condition
Input impedance	1M ohm ±10% (FM) 100k ohm ±10% (DR)	INPUT BNC	Resistance substitution method or digital voltmeter
Output impedance	75 ohm ±10%	OUTPUT BNC	Resistance substitution method
Input range accuracy	Each range ±3%	OUTPUT BNC	Measure in 1V output range
Center frequency	108kHz ±800Hz	MONITOR OUT BNC	With V/F monitor under input zero shift = 0%, input range = 1V, and input = 0V
Deviation factor	151.2kHz ±800Hz 64.8kHz ±800Hz	MONITOR OUT BNC	With V/F monitor under input zero shift = 0%, input range = 1V, and input = ±1V
Input zero shift	±100 to ±160%	Bar graph	The bar graph shall represent ±100% to 1±20% for all channel under input BNC = 0V and input zero shift = ±110% for all channels.
Input level shift	±100 % or more (±20V) max.	Bar graph	With input level shift SW set to ON, turn R903 fully clockwise or counterclockwise under input BNC = 0V, input zero shift = 0% for all channels and input range = 20V for all channels.
Output range accuracy	Each range ±3%	OUTPUT BNC	Measure under input range = 1V and input zero shift = 0% with 1V, then 0V applied to input BNC.
Output current	Approx. 20 mA	OUTPUT BNC	Input range = 1V, input BNC = ±1V, output BNC = 20 ohm load, output range = 5V.
Output zero shift	140 to 160% (1.4 to 1.6V)	EL digital voltmeter	Output range = 1V with output zero shift = ±max
Linearity	Each speed ±0.35%	OUTPUT BNC	High band, input range = 1V at all speeds (WBI at 1.2 cm/s if 0.6 cm/s is unavailable)

Overall specifications chart-2

Item	Specification	Check point	Measurement condition
Frequency response 76 cm/s DC to 40kHz 38 cm/s DC to 20kHz 19 cm/s DC to 10kHz 9.5 cm/s DC to 5kHz 4.8 cm/s DC to 2.5kHz 2.4 cm/s DC to 1.25kHz 1.2 cm/s DC to 625Hz	FA +0.4, -0.8 dB LP +0.4, -9±3 dB (at fc)	OUTPUT BNC	Prescribed input/output setting High band only. Referenced at 1/10 fc for both FA and LP
Square wave form	No overshoot fluctuation		Simultaenous recording and reproduction at 76 cm/s in high band with ±1V square wave at 400 Hz applied to input.
S/N HIGH BAND 76 cm/s 38 cm/s 19 cm/s 9.5 cm/s 4.8 cm/s 2.4 cm/s 1.2 cm/s	COMP OFF / ON 47 dB / 47 dB 47 dB / 47 dB 47 dB / 47 dB 46 dB / 46 dB 44 dB / 44 dB 42 dB / 42 dB 40 dB / 40 dB	OUTPUT BNC	Input = 0V at all speeds in high band. NOTE: Heterochronicreproduction during measurement with COMP on.
S/N WB-G1 76 cm/s 38 cm/s 19 cm/s 9.5 cm/s 4.8 cm/s 2.4 cm/s 1.2 cm/s	COMP OFF / ON 50 dB / 50 dB 50 dB / 50 dB 50 dB / 50 dB 48 dB / 48 dB 47 dB / 47 dB 42 dB / 42 dB 46 dB / 46 dB	OUTPUT BNC	Input = 0V at 76 to 1.2 cm/s for WB-I.
P-P noise in HIGH BAND			With COMP off in high band (76 cm/s only)
FM Distortion factor	3% or less (HIGH) 2% or less (WB-G1)	OUTPUT BNC	Second harmonic distortion (1/2 fc)
DR Distortion	1%		Third harmonic distortion (1/10 fc)
Closstalk	Same as S/N	OUTPUT BNC	Only in high band at 76, 38, and 19 cm/s.

Overall specifications chart-3

Item	Specification	Check point	Measurement condition
Level conversion response	±10mV or less	OUTPUT BNC	Record in high band at 76 cm/s and reproduce at 9.5 and 1.2 cm/s.
Drift	±0.4% or less	OUTPUT BNC	Start to record forward at 76 cm/s 15 minutes after power is applied and continue recording until one reel of tape is finished, then rewind to biginning of tape and reproduce at 76 cm/s. Record drifts on pen recorder during both recording to and reproduction from tape.
Monitor output voltage (channle 1 only)	±1V ±20 mV	MONITOR OUT BNC	For input of ±1V with monitor in SOURCE mode
	±5V ±100 mV		For input of ±1V in output range of 5V with monitor in OUTPUT mode.
Calibration voltage DC+100% DC-100% AC100%	1V ±20mV -1V ±20mV 0.707Vrms±5%	OUTPUT BNC (CH 1)	At 9.5 and 1.2 cm/s for AC
Memo output voltage			At tape speed of 19 cm/s, record forward memo input of 10 mVrms sine wave at 1kHz with speaker volume control turned fully clockwise
Erase current	500 to 700 mAp-p	TP24 on bias mixer (GP24 for ground)	REC/FWD.
Power consumption			REC/FWD and FAST/REV in high band at 76 cm/s for 100 and 220VAC and 12 and 24V DC.
Temperature test			Record forward input of +1V at 2.4 cm/s for 30 minutes at 0° C and 30 minutes at 40°C, than reproduce at 38 cm/s at room temperature and measure with VISIGRAPH.

SECTION 4 ELECTRICAL

ELECTRICAL

- Destination and meaning of input/output symbols on the schematic diagrams
- List of abbreviation for schematic diagrams

4-1 Schematic diagram, Printed circuit board and parts list

- 4-1-1 ID BOARD
- 4-1-2 TTP CONTROL
- 4-1-3 BIAS MIXER
- 4-1-4 DISPLAY MPU
- 4-1-5 TTP I/F
- 4-1-6 TTP DRIVER
- 4-1-7 HEAD AMP
- 4-1-8 FRONT I/F
- 4-1-9 SUB DRIVER PCBA
- 4-1-10 CONTROL SW
- 4-1-11 OPERATE SW
- 4-1-12 FM AMP
- 4-1-13 CAL/MEMO
- 4-1-14 MAIN MPU
- 4-1-15 MOIRE AMP PCBA
- 4-1-16 AMP MOTHER BOARD
- 4-1-17 CONTROL MOTHER BOARD
- 4-1-18 SUB MOTHER BOARD AND TTP ASS'Y

4-2 Check and adjustment - Electrical -

- 4-2-1 Adjusting the CAL/MEMO PCBA
  - A) Adjusting the CAL circuit
  - B) Adjusting the MONITOR COMP circuit
- 4-2-2 Adjusting the MAIN MPU PCBA
  - A) Adjusting the D/A converter
  - B) Adjusting the A/D converter
  - C) Adjusting the digital voltmeter
  - D) Adjusting the clock
- 4-2-3 Adjusting the FM AMPLIFIER
  - A) Adjusting the recording section
  - B) Adjusting the reproduction section
  - C) Adjusting the erase trap
- 4-2-4 Adjusting the BIAS MIXER PCBA
  - A) Adjusting the erase section
  - B) Adjusting and checking the recording section
- 4-2-5 Adjusting the DISPLAY MPU PCBA
  - A) Zero point
  - B) Level
  - C) Zero point (for the MONITOR)
- 4-2-6 Adjusting the ID BOARD
  - A) Adjusting the ID gain
- 4-2-7 Adjusting the TTP CONTROL PCBA
  - A) Adjusting the MOIRE SERVO circuit
  - B) Adjusting tape servo circuit
- 4-2-8 Adjusting the TTP/IF PCBA
  - A) Adjusting the BOT sensor output
  - B) Adjusting the EOT sensor output
  - C) Adjusting the reel pulse sensor output
- 4-2-9 Adjusting the TTP DRIVER PCBA
  - A) Adjusting supply reel-side tape tension
  - B) Adjusting takeup reel-side tape tension

SECTION 4 ELECTRICAL

DESTINATION AND MEANING OF INPUT/OUTPUT SYMBOLS ON THE SCHEMATIC DIAGRAMS

1. EXAMPLE

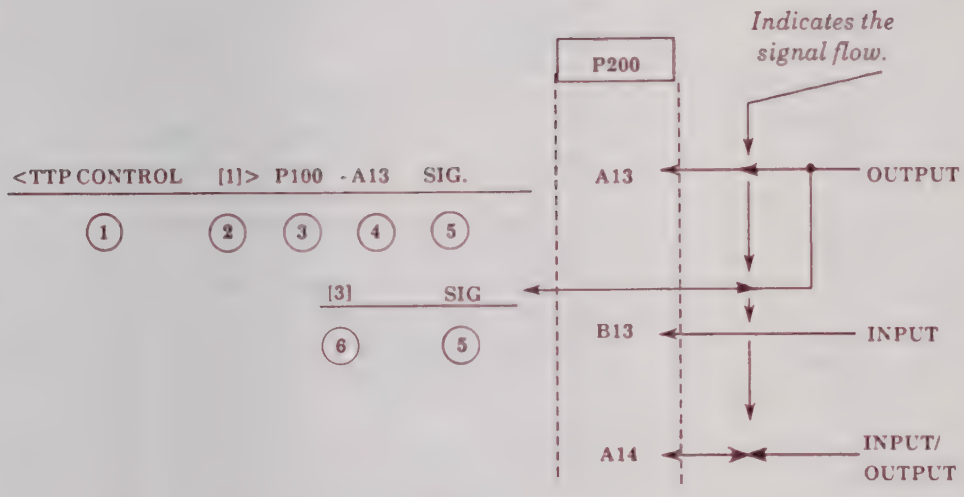

The number (1) to (6) indicate as follows:

(1) Signal destination (PCBA name)

(2) Signal destination (page number of the schematic diagram)

(3) Signal destination (the number of the connector on the PCBA)

(4) Signal destination (the number of the pin on the PCBA)

(5) Signal name

(6) Destination on the schematic diagram on the PCBA (page number)

2. CONNECTOR NAME

Example: Connectors P100 and J100 are used in a pair.

Example: TB100 indicates a soldered flat cable.

LIST OF ABBREVIATION FOR SCHEMATIC DIAGRAMS-1

ACC	ACCESS
ACK	ACKNOWLEDGE
AD ABORT	AD CONVERSION ABORT
ADC	ANALOG DIGITAL CONVERTER
ATT	ATTENUATER
BA	BUS AVAILABLE
BATT	BATTERY
BD	BUS DATA
BE	BUS ENABLE
BL SOL	BRAKE SOLENOID
BOT	BIGINNING OF TAPE
BQ	BUS QUERY
BRK	BRAKE
CAP	CAPSTAN
CAR DET	CARRIER DETECTOR
CG PAGE	CHARACTER GENERATOR PAGE
CHK	CHECK
CK	CLOCK
CMA	CHARACTER MEMORY ADDRESS
COMP	COMPENSATION
CPU	CENTRAL PROCESSING UNIT
CR	CARRIAGE RETURN
CRAM	CHARACTER RAM
CROM	CHARACTER ROM
CRTC	CRT CONTROLLER
CTL	CONTROL
CUDISP	CURSOR DISPLAY
DBE	DATA BAS ENABLE
DET	DETECTED
DIR	DIRECTION
DISP	DISPLAY
DMA	DIRECT MEMORY ACCESS
DMM	DIGITAL MONITOR METER
DOT X	DOT X AXIS REGISTER
DOT Y	DOT Y AXIS REGISTER
DRQ	DATA REQUEST
DSP	DISPLAY
DSP-M ACK	DISPLAY TO MAIN ACKNOWLEDGE
EDGE	EDGE CHANNEL
EL	ELECTORIC LUMNESSENS
EL DIN	EL DATA IN
EL HD	EL HORIZINTAL DISABLE
EL VD	EL VERTICAL DISABLE
EN	ENABLE
EOT	END OF TAPE
EXT	EXTERNAL
FMIC	FRONT MIC
FREV	FAST REVERSE

LIST OF ABBREVIATION FOR SCHEMATIC DIAGRAMS-2

GDOT	GRAPHIC DOT
GRAM	GRAPHIC RAM
GRH	GRAPH
HBEN	HIGH BYTE ENABLE
HLT	HALT
INH	INHIBIT
INT	INTERRUPT
INV	INVERTED
IRQ	INTERRUPT REQUEST
LIC	LAST INSTRUCTION CYCLE
LPF	LOW PASS FILTER
M EXT BD	MAIN EXTERNAL BUS DATA
M-DSP ACK	MAIN TO DISPLAY ACKNOWLEDGE
MEM	MEMORY
MOD	MODULATED
MON	MONITOR
MR RDY	MEMORY READY
NC	NONCONNECT
NMI	NON MASKABLE INTERRUPT
OSC	OSCILLATOR
PARAM	PARAMETER
PIA	PAPARALLEL INTERFACE ADAPTER
PKH RECAL	PEAK HOLD RECALIBRATE
PR SOL	PINCH ROLLER SOLENOID
PRT	PRINT
PS LOAD	PARARELL/SERIAL REGISTOR LOAD
PWR	POWER
R-BUF	READ BUFFER CHANGE
RAO-2	RASTER ADDRESS
REF	REFFERENCE
REQ	REQUEST
RES	RESET
RET	RETURN
S/H	SAMPLE HOLD
SBA	SUB BUS ADDRESS
SBE	SUB BUS ENABLE
SBEAQ	SUB BUS E&Q
SBED	SUB BUS-E DELATED
SBQ	SUB BUS QUERY
SBR	SUB BUS READ
SBRE	SUB BUS READ ENABLE
SBWE	SUB BUS WRITE ENABLE
SD	SUB DATA
SEL	SELECTOR
SET	SET
SIG	SIGNAL
SIO	SUB I/O
SIO SEL	SUB BUS SELECT
STATUS	STATUS

LIST OF ABBREVIATION FOR SCHEMATIC DIAGRAMS-3

STRB	STROBE
SVMA	SYSTEM VALID MEMORY ADDRESS
SYS CTL	SYSTEM CONTROL
TACH	TACHOMETER
TRG	TRIGGER
TS CH	TAPE SERVO CHANNEL
TTP	TAPE TRANSPORT
TX STB	TRANSFER STROBE
VFC	VOLTAGE-FREQUENCY CONVERTER
VR	VARIABLE RESISTOR
VSYNC	VERTICAL SYNC
WB	WIDE BAND
WEH	WRITE ENABLE BY HARDWARE
WES	WRITE ENABLE BY SOFTWARE

4-1 SHCEMATIC DIAGRAM, PRINTED CIRCUIT BOARD AND PARTS LIST

4-1-1 ID BOARD SCHEMATIC DIAGRAMS [1]

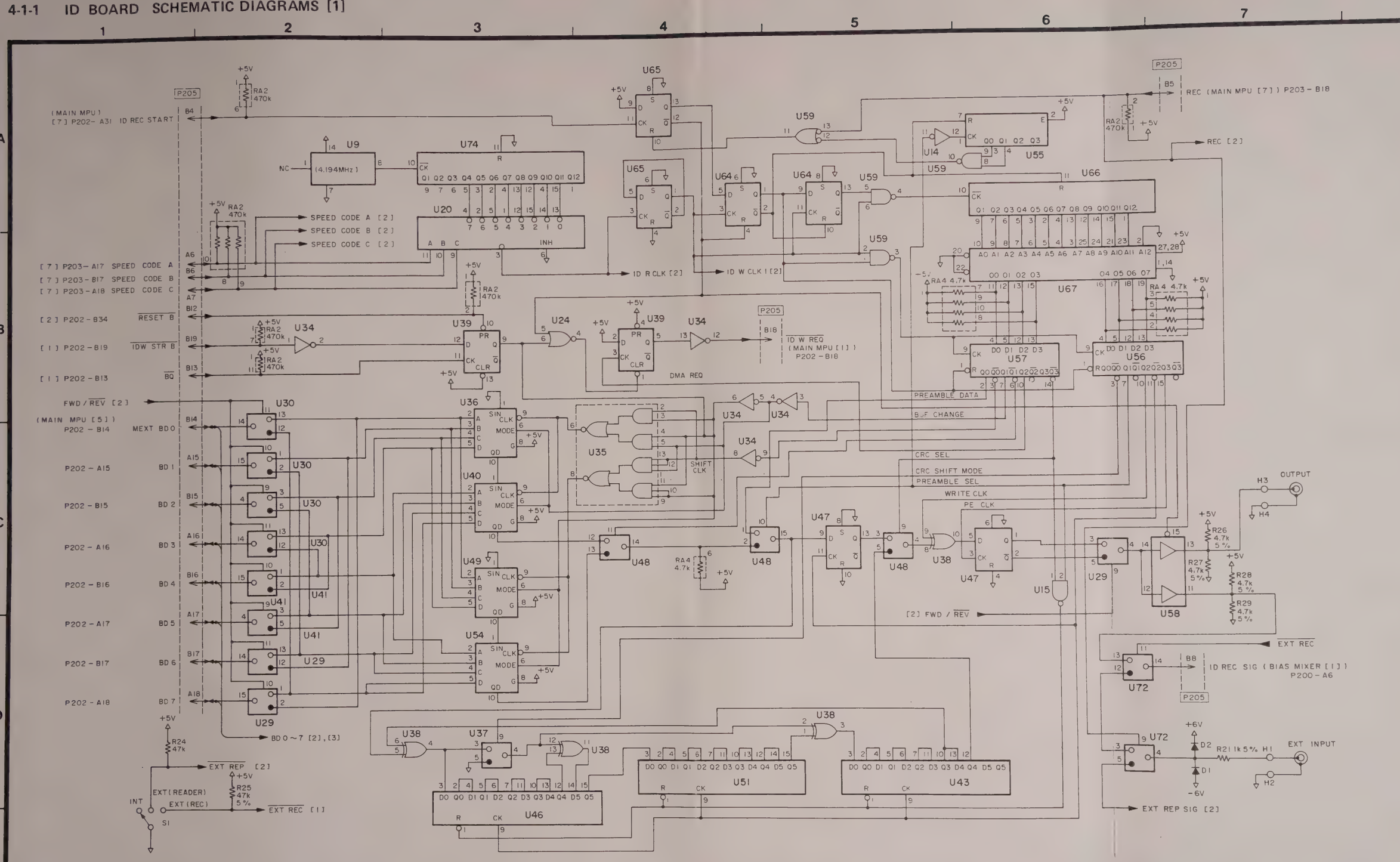

U9	: 4.194304MHz	U29,30,41	: 74HC4053S	U39	: 74HC74S	U58	: 74HC367S
U14	: 4049S	U34	: 74HC04S	U46,43,51	: 40174S	U65,64,47	: 4013S
U15, 59	: 4011S	U35	: 74HC51S	U48,72,37	: 4053S	U66,74	: 74HC4040S
U20	: 4051S	U36,40,49 54	: 74LS295	U55	: 4520S	U67	: 27C64
U24	: 74HC02S	U38	: 4070S	U57,U56	: 40175S	D1, 2	: ISS132

NOTE: UNLESS OTHERWISE SPECIFIED ALL RESISTORS ARE IN OHMS 1/4W, 5% AND ALL CAPACITORS ARE IN MICROFARADS.

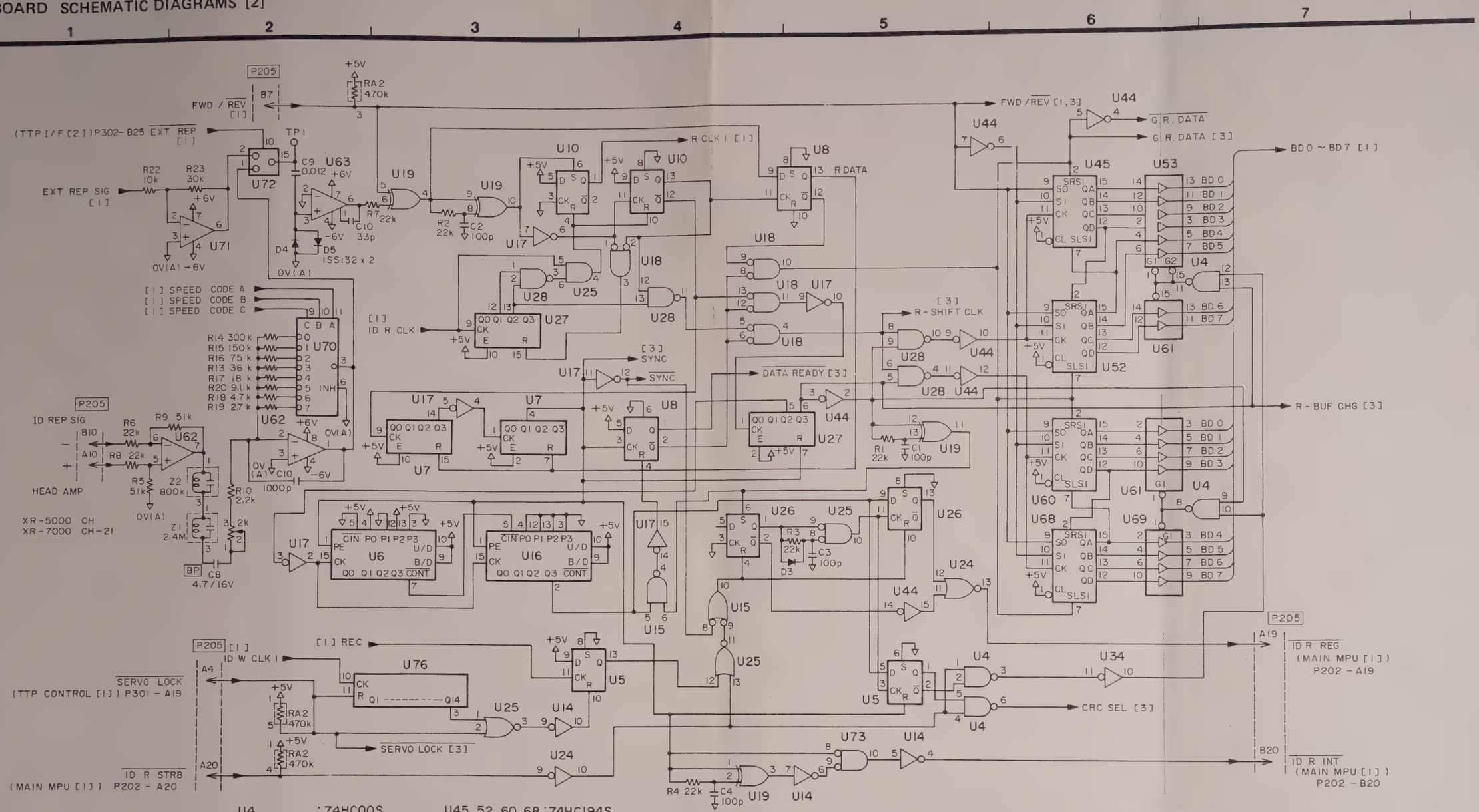

U4	: 74HC00S	U45,52,60,68	: 74HC194S
U6,16	: 4029S	U53,61,69	: 74HC367S
U7,27	: 4520S	U62	: 072S
U5,8,10,26	: 4013S	U63	: LM318
U14,17,44	: 4049S	U70	: 4051S
U18,25,73	: 4001S	U71	: 071S
U19	: 4070S	U72	: 4053S
U24	: 74HC02S	U76	: 4020S
U28,15	: 4011S	D3,4,5	: ISS132
U34	: 74HC04S		

NOTE: UNLESS OTHERWISE SPECIFIED ALL RESISTORS ARE IN OHMS 1/4W, 5% AND ALL CAPACITORS ARE IN MICROFARADS.

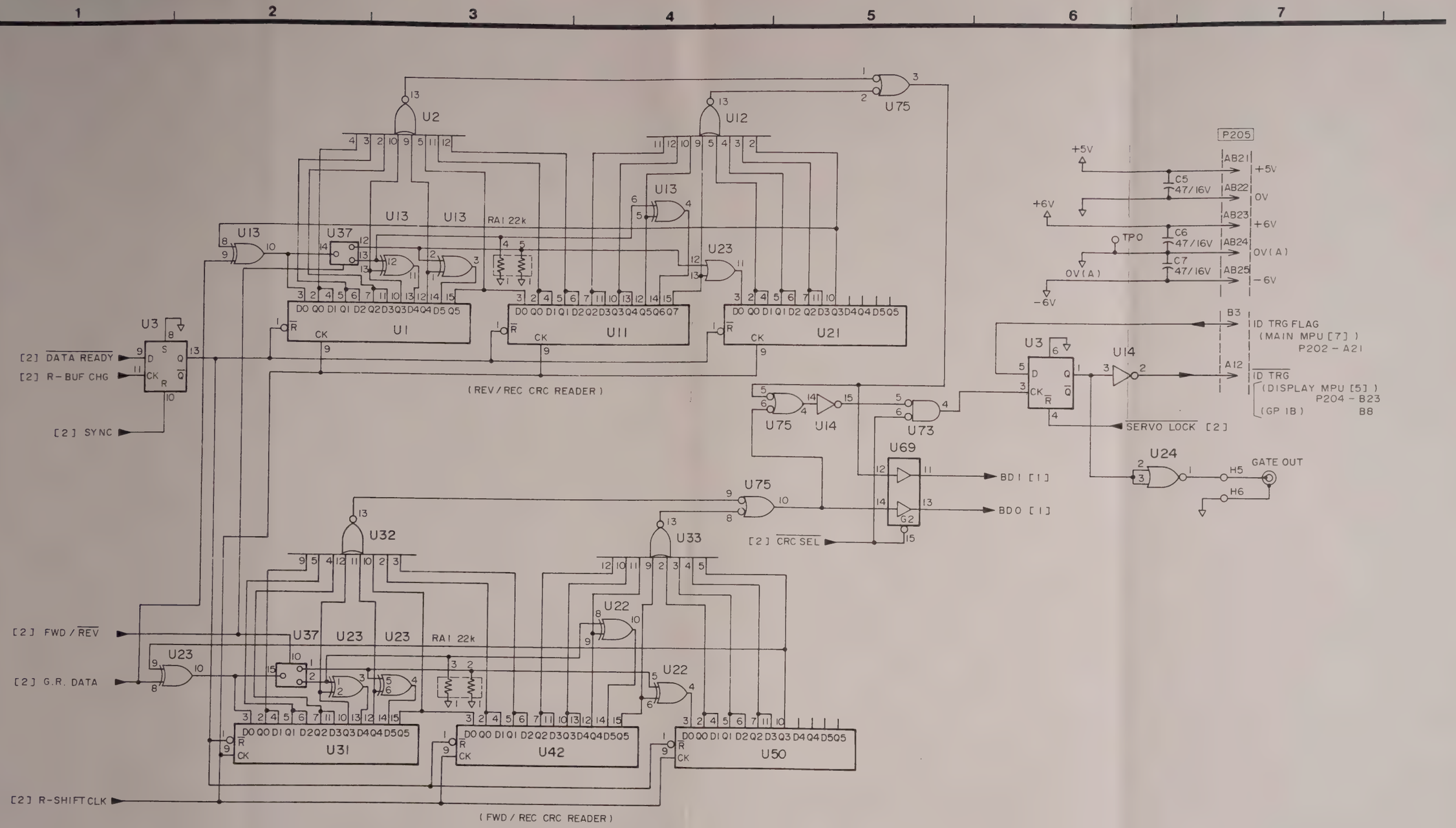

U2,12,32,33	: 4078S	U75	: 4011S
U3	: 4013S	U14	: 4049S
U1,11,21,31 42,50	: 40174S	U69	: HC367S
U13,22,23	: 4070S	U24	: HC02S
U37	: 4053S		
U73	: 4001S		

NOTE: UNLESS OTHERWISE SPECIFIED ALL RESISTORS ARE IN OHMS 1/4W, 5% AND ALL CAPACITORS ARE IN MICROFARADS.

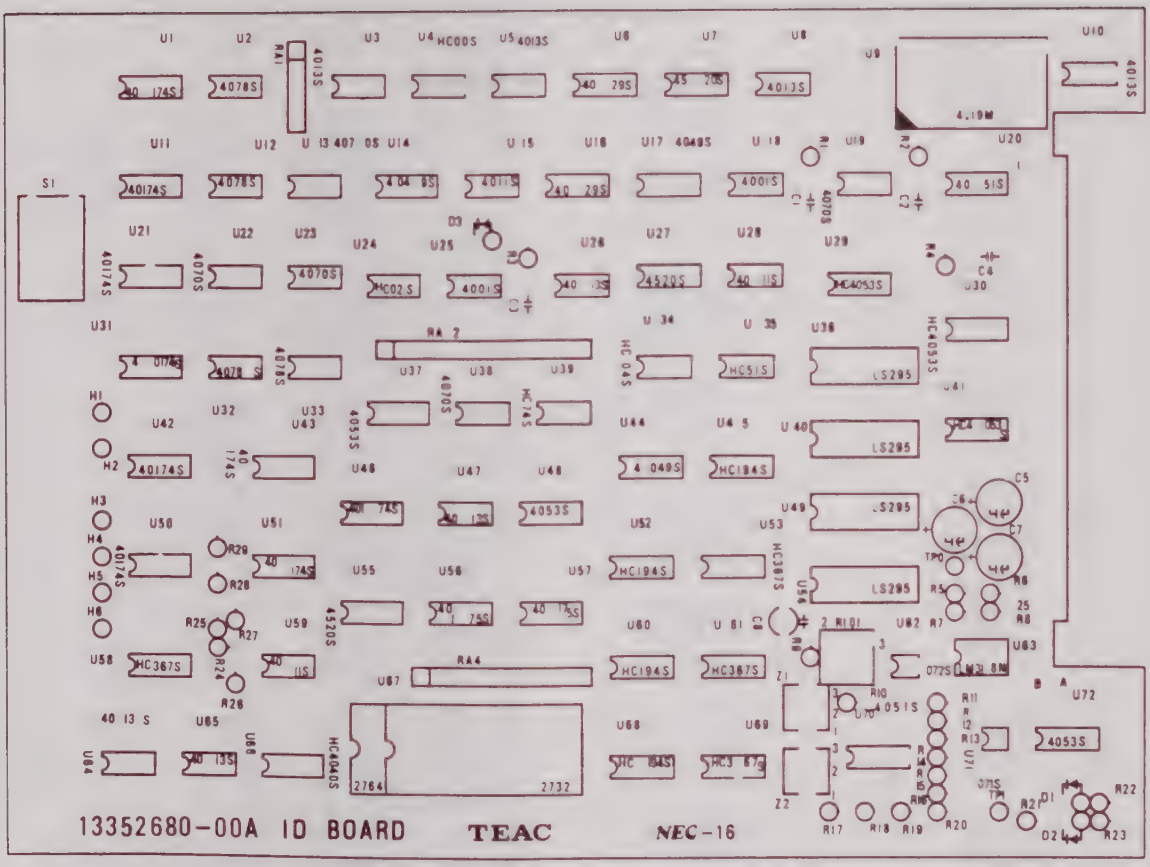
13352680-00A ID BOARD
TEAC
NEC-16

PARTS LIST– ID BOARD PCBA –

Ref. No.	Part No.	Description	
	1555268000	**ID Board PCBA**	
– ICs –			
U1	*13443154	IC	MN40174BS
U2	*13443153	IC	MN4078BS
U3	*13442162	IC	HD14013BFP
U4	*13443086	IC	SN74HC00NS
U5	*13442162	IC	HD14013BFP
U6	*13443151	IC	MN4029BS
U7	*13443156	IC	MN4520BS
U8	*13442162	IC	HD14013BFP
U9	*13295160	OSC	4.194MHz
U10	*13442162	IC	HD14013BFP
U11	*13443154	IC	MN40174BS
U12	*13443153	IC	MN4078BS
U13	*13442420	IC	HD14070BFP
U14	*13442166	IC	HD14049UBFP
U15	*13442161	IC	TC4011BF
U16	*13443151	IC	MN4029BP
U17	*13442166	IC	HD14049UBFP
U18	*13442160	IC	TC4001BF
U19	*13442420	IC	HD14070BFP
U20	*13443152	IC	MN4051BF
U21	*13443154	IC	MN40174BS
U22	*13442420	IC	HD14070BFP
U23	*13442420	IC	HD14070BFP
U24	*13443087	IC	SN74HC02NS
U25	*13442160	IC	TC4001BF
U26	*13442162	IC	HD14013BFP
U27	*13443156	IC	MN4520BS
U28	*13442161	IC	TC4011BF
U29	*13443147	IC	MN74HC
U30	*13443147	IC	MN74HC
U31	*13443154	IC	MN40174BS
U32	*13443153	IC	MN4078BS
U33	*13445153	IC	MN4078BS
U34	*13442505	IC	TC74HC04F
U35	*13443148	IC	MN74HC51S
U36	*13441263	IC	SN74LS295BN
U37	*13442419	IC	TC4073BF
U38	*13442420	IC	HD14070BFP
U39	*13442775	IC	MN74HC74S
U40	*13441263	IC	SN74LS295BN
U41	*13443147	IC	MN74HC
U42	*13443154	IC	MN40174BS
U43	*13443154	IC	MN40174BS
U44	*13442166	IC	HD14049UBFP
U45	*13443149	IC	HC74HC194F
U46	*13443154	IC	MN40174BS
U47	*13442162	IC	HD14013BFP
U48	*13442419	IC	TC4073BF
U49	*13441263	IC	SN74LS295BN
U50	*13443154	IC	MN40174BS
U51	*13443154	IC	MN40174BS
U52	*13443149	IC	MC74HC194F
U53	*13443150	IC	MC74HC367S
U54	*13441263	IC	SN74LS295BN
U55	*13443156	IC	MN4520BS
U56	*13443155	IC	MN40175BS
U57	*13443155	IC	MN40175BS
U58	*13443150	IC	MN74HC367S
U59	*13442161	IC	TC4011BF
U60	*13443149	IC	HC74HC194F
U61	*13443150	IC	MN74HC367S
U62	*13447446	IC	TLD72CPS
U63	*13447137	IC	LM318N
U64	*13442162	IC	HD14013BFP
U65	*13442162	IC	HD14013BFP

Ref. No.	Part No.	Description	
U66	*13443108	IC	SN74HC4040NS
U67	1370009300	Memory, IC	ROM NXR ID
U68	*13443149	IC	MC74HC194F
U69	*13443150	IC	MC74HC367S
U70	*13443152	IC	MN4051BF
U71	*13447756	IC	TL071CPS
U72	*13442419	IC	TC4073BF
U73	*13442160	IC	TC4001BF
U74	*13443108	IC	SN74HC4040NS
U75	*13442161	IC	TC4011BF
U76	*13442163	IC	HD14020BFP
– Diodes –			
D1-D5	*13411383	Diode	1SS132
– Capacitors –			
C1-C4	12900453	Ceramic	100pF 100V
C5-C7	12902015	Electrolytic	47μF 16V
C8	12904069	Electrolytic	4.7μF 16V
C9	12460123	Metallized	0.012μF 100V
C10	12451102	Metallized	1000pF 100V
C11	12900447	Ceramic	33pF 100V
– Resistors –			
R1-R4	11190223	Carbon	22KΩ 1/5W
R5	11070513	Metal Film	51KΩ 1/5W
R6	11070223	Metal Film	22KΩ 1/5W
R7	11190223	Carbon	22KΩ 1/5W
R8	11070223	Metal Film	22KΩ 1/5W
R9	11070513	Metal Film	51KΩ 1/5W
R10	11190511	Carbon	510Ω 1/5W
R13	11070363	Metal Film	36KΩ 1/5W
R14	11070304	Metal Film	300KΩ 1/5W
R15	11070154	Metal Film	150KΩ 1/5W
R16	11070753	Metal Film	75KΩ 1/5W
R17	11070183	Metal Film	18KΩ 1/5W
R18	11070472	Metal Film	4.7KΩ 1/5W
R19	11070272	Metal Film	2.7KΩ 1/5W
R20	11070912	Metal Film	9.1KΩ 1/5W
R21	11190102	Carbon	1KΩ 1/5W
R22	11070103	Metal Film	10KΩ 1/5W
R23	11070303	Metal Film	30KΩ 1/5W
R24	11190473	Carbon	47KΩ 1/5W
R25	11190473	Carbon	47KΩ 1/5W
R26	11190472	Carbon	4.7KΩ 1/5W
R27	11190472	Carbon	4.7KΩ 1/5W
R28	11190472	Carbon	4.7KΩ 1/5W
R29	11190472	Carbon	4.7KΩ 1/5W
R101	*13257183	Variable	2KΩ
RA1	*13497768	Resistor Array	22KΩx4
RA2	*13493063	Resistor Array	470KΩx11
RA4	*13497890	Resistor Array	4.7KΩx9
– Miscellaneous –			
TP0	13189150	Test Point	
TP1	13189150	Test Point	
S1	*13224211	Switch, Slide	
Z1	*1472351200	Coil, Bias Trap	2.4MHz
Z2	*1349404300	Coil, Bias Trap	800KHz
	1627118470	Plate, Name	
	*13101682	Connector BNC	
	13121113	Connector 50P	
	1678789500	Card Puller	
	16498766	Screw, Pan	2.6 x 6
	1680351800	Bracket, ID	
	*13299479	Socket, IC 28P (U67)	

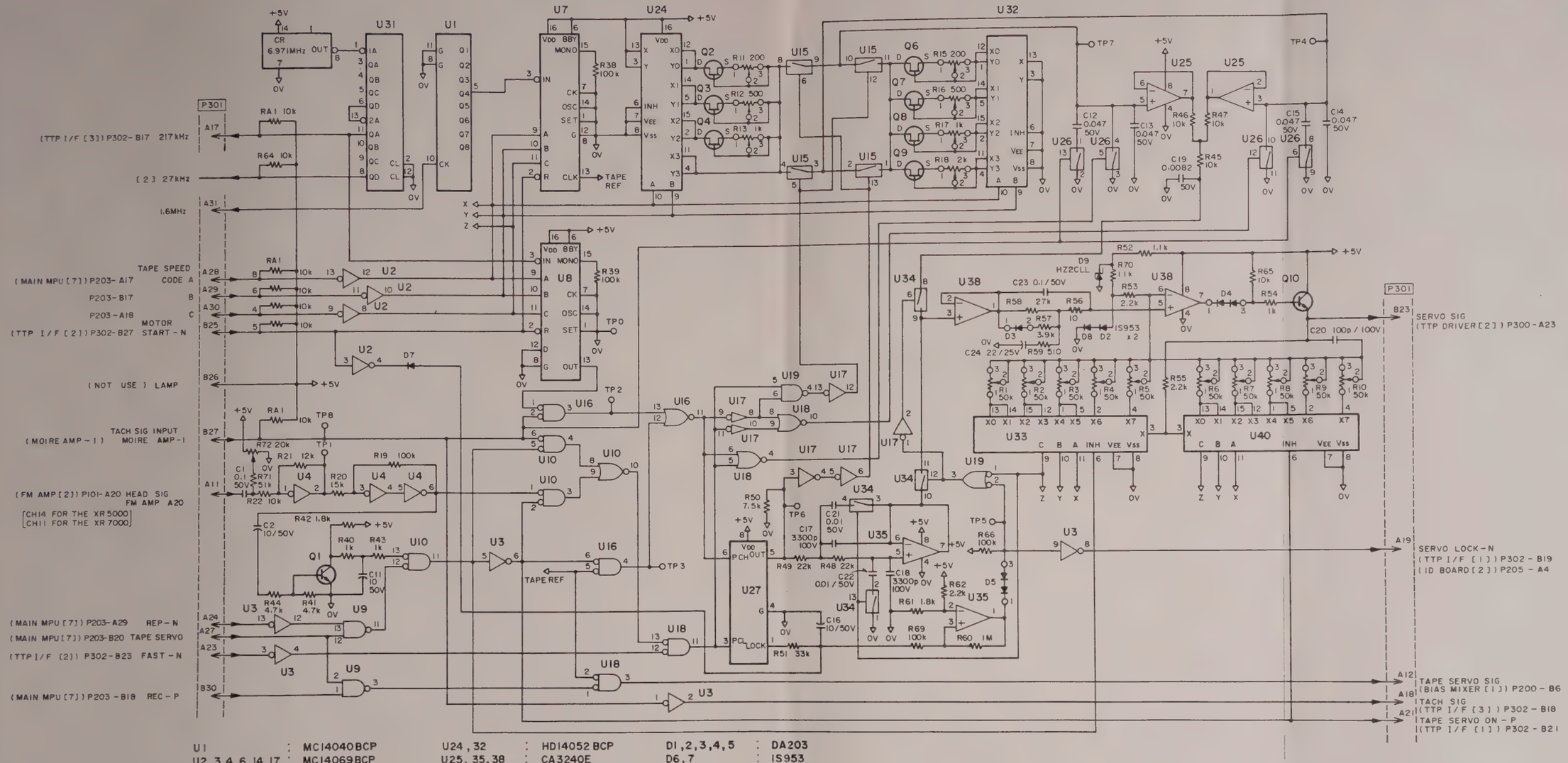

U1	:	MC14040BCP	U24, 32	:	HD14052BCP	D1, 2, 3, 4, 5	: DA203
U2, 3, 4, 6, 14, 17	:	MC14069BCP	U25, 35, 38	:	CA3240E	D6, 7	: 1S953
U5, 22	:	MC14071BCP	U27	:	MM74C932N		
U7, 8, 39	:	MC14536BCP	U31	:	74LS393N		
U9, 19	:	MC14011BCP	U33, 40	:	HD14051BCP		
U10, 11, 16, 18	:	MC14001BCP					
U12, 20, 23, 30	:	MC14081BCP	Q1, 10	:	2SC2021 LN-R		
U13	:	MC14073BCP	Q2 ~ 4	:	2SK117-BL		
U15, 26, 34	:	HD14066BCP	Q6 ~ 9				
U21, 28, 29, 36, 37	:	74HC107P					

NOTE: UNLESS OTHERWISE SPECIFIED ALL RESISTORS ARE IN OHMS 1/4W, 5% AND ALL CAPACITORS ARE IN MICROFARADS.

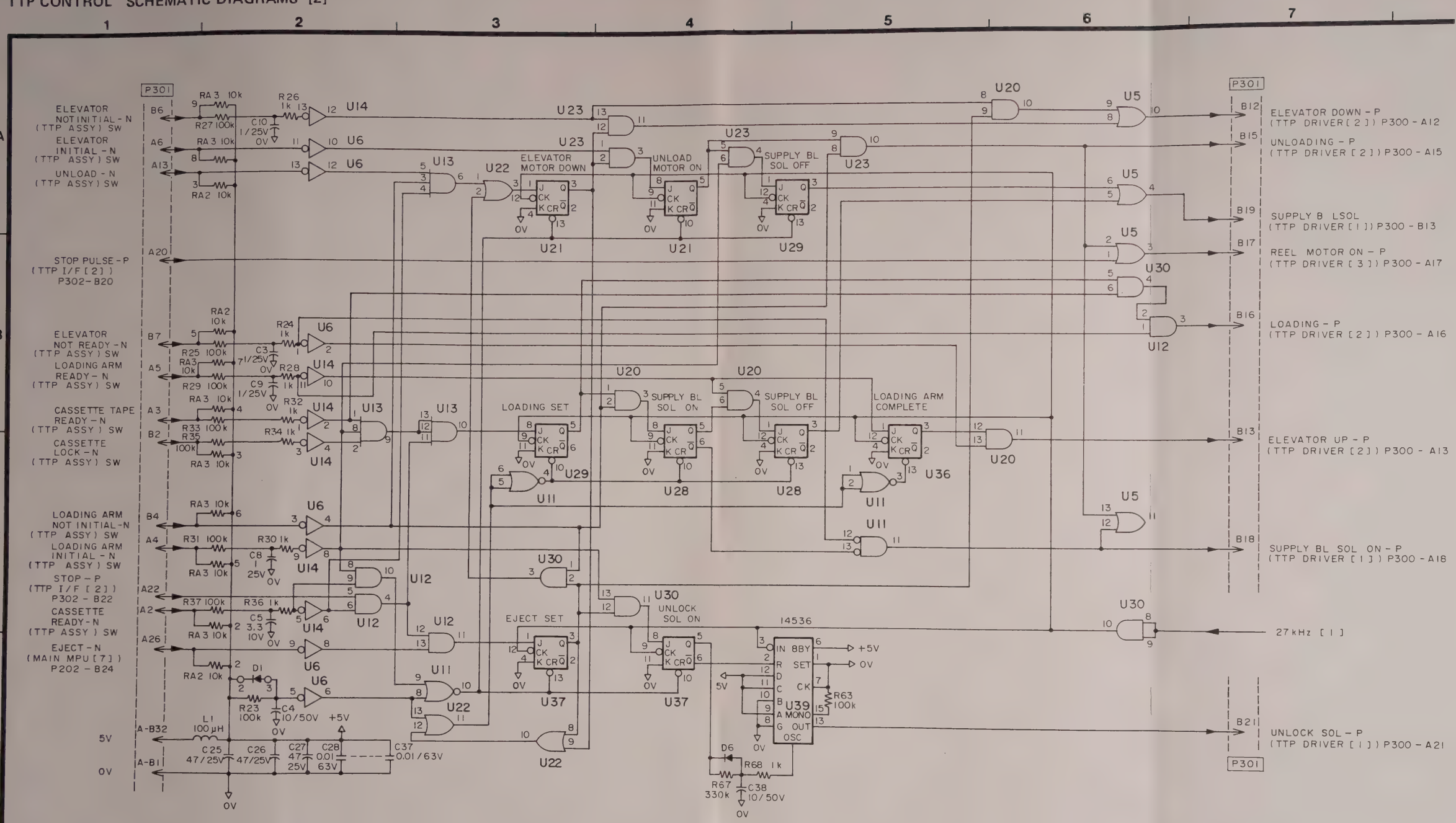

NOTE: UNLESS OTHERWISE SPECIFIED ALL RESISTORS ARE IN OHMS 1/4W, 5% AND ALL CAPACITORS ARE IN MICROFARADS.

PRINTED CIRCUIT BOARD – TTP CONTROL –

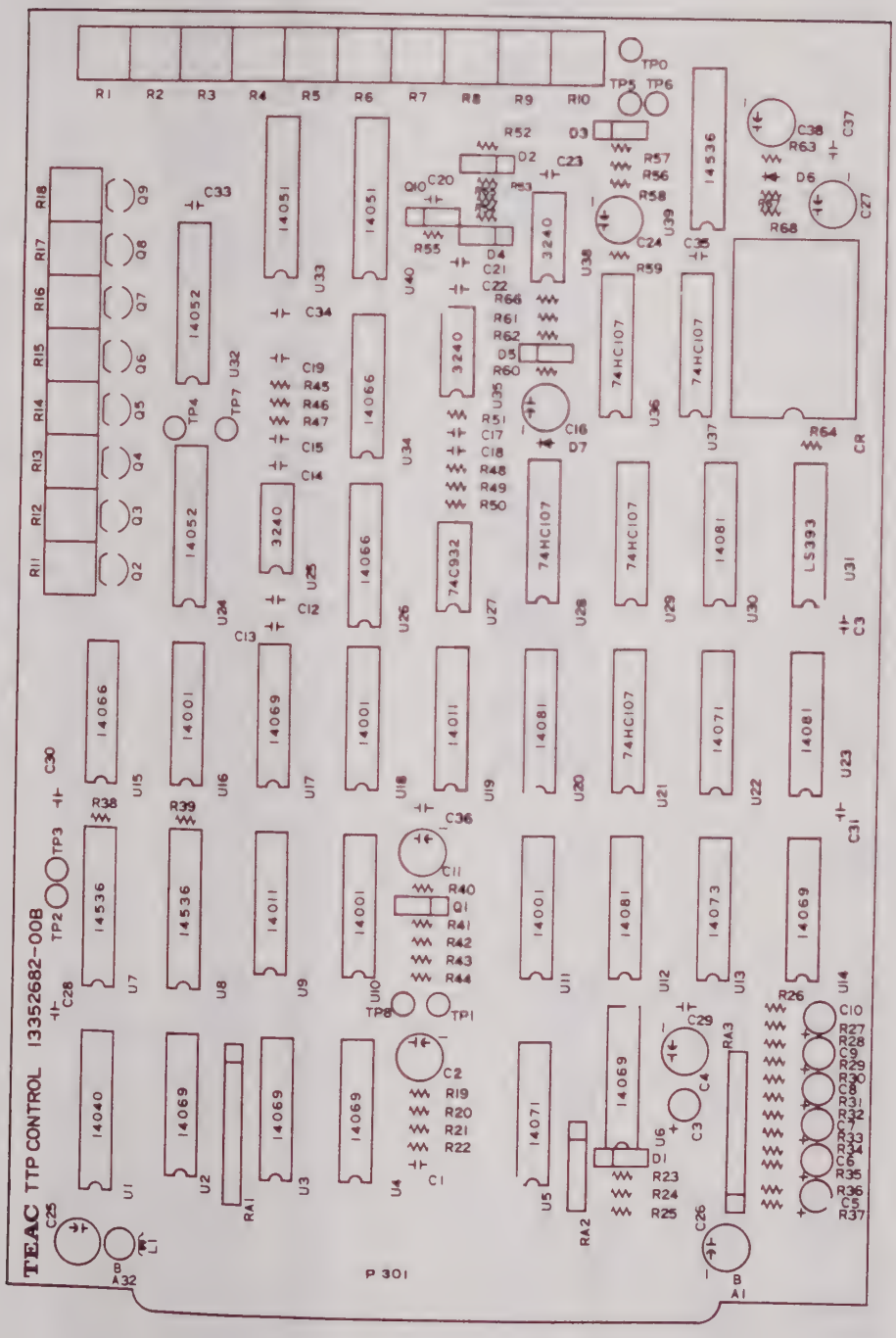

Ref. No.	Part No.	Description		
	1555268200	**TTP Control PCBA**		
– ICs –				
U1	13441395	IC	MC14040BCP	
U2	13441401	IC	MC14069BCP	
U3	13441401	IC	MC14069BCP	
U4	13441401	IC	MC14069BCP	
U5	*13441405	IC	MC14071BCP	
U6	13441401	IC	MC14069BCP	
U7	*13441361	IC	MC14536BCP	
U8	*13441361	IC	MC14536BCP	
U9	*13441379	IC	MC14011BCP	
U10	*13441378	IC	MC14001BCP	
U11	*13441378	IC	MC14001BCP	
U12	*13441411	IC	MC14081BCP	
U13	*13441407	IC	MC14073BCP	
U14	*13441401	IC	MC14069BCP	
U15	*13441733	IC	HD14066BCP	
U16	*13441378	IC	MC14001BCP	
U17	13441401	IC	MC14069BCP	
U18	*13441378	IC	MC14001BCP	
U19	*13441379	IC	MC14011BCP	
U20	*13441411	IC	MC14081BCP	
U21	*13442652	IC	TC74HC107P	
U22	*13441405	IC	MC14071BCP	
U23	*13441411	IC	MC14081BCP	
U24	*13441731	IC	HD14052BCP	
U25	*13447160	IC	CA3240E	
U26	*13441733	IC	HD14066BCP	
U27	*13442854	IC	MM74HC932N	
U28	*13442652	IC	TC74HC107P	
U29	*13442652	IC	TC74HC107P	
U30	*13441411	IC	MC14081BCP	
U31	*13442475	IC	SN74LS393N	
U32	*13441731	IC	HD14052BCP	
U33	*13441730	IC	HD14051BCP	
U34	*13441733	IC	HD14066BCP	
U35	*13447160	IC	CA3240E	
U36	*13442652	IC	TC74HC107P	
U37	*13442652	IC	TC74HC107P	
U38	*13447160	IC	CA3240E	
U39	*13441361	IC	MC14536BCP	
U40	*13441730	IC	HD14051BCP	
– Transistors –				
Q1	*13424296	Transistor	2SC2021LN-R	
Q2-Q4	*13428119	FET	2SK117-BL	
Q6-Q9	*13428119	FET	2SK117-BL	
Q10	*13424296	Transistor	2SC2021LN-R	
– Diodes –				
D1	*13411405	Diode	DA203	
D2	*13413020	Diode	1S953	
D3	*13411405	Diode	DA203	
D4	*13411405	Diode	DA203	
D5	*13411405	Diode	DA203	
D6	*13413020	Diode	1S953	
D7	*13413020	Diode	1S953	
D8	*13413020	Diode	1S953	
D9	*13415387	Zener Diode	HZ2CLL	
– Capacitors –				
C1	12906556	Ceramic	0.1μF	50V
C2	12903074	Electrolytic	10μF	50V
C3	12902382	Tantalum	1μF	25V
C4	12903074	Electrolytic	10μF	50V
C5	12902351	Tantalum	3.3μF	10V
C8	12902382	Tantalum	1μF	25V
C9	12902382	Tantalum	1μF	25V
C10	12902382	Tantalum	1μF	25V
C11	12903074	Electrolytic	10μF	50V
C12-C15	12415473	Ceramic	0.047μF	50V
C16	12903074	Electrolytic	10μF	50V
C17	12901660	Ceramic	3300pF	100V
C18	12901660	Ceramic	3300pF	100V
C19	12415822	Ceramic	8200pF	50V
C20	12900453	Ceramic	100pF	100V

Ref. No.	Part No.	Description		
C21	12414103	Ceramic	0.01μF	50V
C22	12414103	Ceramic	0.01μF	50V
C23	12415104	Ceramic	0.1μF	50V
C24	12903070	Electrolytic	22μF	25V
C25	12903071	Electrolytic	47μF	25V
C26	12903071	Electrolytic	47μF	25V
C27	12903071	Electrolytic	47μF	25V
C28-C37	12901325	Ceramic	0.01μF	63V
C38	12903074	Electrolytic	10μF	50V
– Resistors –				
R1-R10	*13256667	Variable	50KΩ	
R11	*13256647	Variable	200Ω	
R12	*13256648	Variable	500Ω	
R13	*13256649	Variable	1KΩ	
R15	*13256647	Variable	200Ω	
R16	*13256648	Variable	500Ω	
R17	*13256649	Variable	1KΩ	
R18	*13256650	Variable	2KΩ	
R19	11173104	Carbon	100KΩ	¼W
R20	11173153	Carbon	15KΩ	¼W
R21	11173123	Carbon	12KΩ	¼W
R22	11173103	Carbon	10KΩ	¼W
R23	11173104	Carbon	100KΩ	¼W
R24	11173102	Carbon	1KΩ	¼W
R25	11173104	Carbon	100KΩ	¼W
R26	11173102	Carbon	1KΩ	¼W
R27	11173104	Carbon	100KΩ	¼W
R28	11173102	Carbon	1KΩ	¼W
R29	11173104	Carbon	100KΩ	¼W
R30	11173102	Carbon	1KΩ	¼W
R31	11173104	Carbon	100KΩ	¼W
R32	11173102	Carbon	1KΩ	¼W
R33	11173104	Carbon	100KΩ	¼W
R34	11173102	Carbon	1KΩ	¼W
R35	11173104	Carbon	100KΩ	¼W
R36	11173102	Carbon	1KΩ	¼W
R37	11173104	Carbon	100KΩ	¼W
R38	11173104	Carbon	100KΩ	¼W
R39	11173104	Carbon	100KΩ	¼W
R40	11173102	Carbon	1KΩ	¼W
R41	11173472	Carbon	4.7KΩ	¼W
R42	11173182	Carbon	1.8KΩ	¼W
R43	11173102	Carbon	1KΩ	¼W
R44	11173472	Carbon	4.7KΩ	¼W
R45	11173103	Carbon	10KΩ	¼W
R46	11173103	Carbon	10KΩ	¼W
R47	11173103	Carbon	10KΩ	¼W
R48	11173223	Carbon	22KΩ	¼W
R49	11173223	Carbon	22KΩ	¼W
R50	11173752	Carbon	7.5KΩ	¼W
R51	11173333	Carbon	33KΩ	¼W
R52	11173112	Carbon	1.1KΩ	¼W
R53	11173222	Carbon	2.2KΩ	¼W
R54	11173102	Carbon	1KΩ	¼W
R55	11173222	Carbon	2.2KΩ	¼W
R56	11173100	Carbon	10Ω	¼W
R57	11173392	Carbon	3.9KΩ	¼W
R58	11173273	Carbon	27KΩ	¼W
R59	11173511	Carbon	510Ω	¼W
R60	11173105	Carbon	1MΩ	¼W
R61	11173182	Carbon	1.8KΩ	¼W
R62	11173222	Carbon	2.2KΩ	¼W
R63	11173104	Carbon	100KΩ	¼W
R64	11173103	Carbon	10KΩ	¼W
R65	11173103	Carbon	10KΩ	¼W
R66	11173104	Carbon	100KΩ	¼W
R67	11173334	Carbon	330KΩ	¼W
R68	11173102	Carbon	1KΩ	¼W
R69	11173104	Carbon	100KΩ	¼W
R70	11173112	Carbon	1.1KΩ	¼W
R71	11190513	Carbon	51KΩ	¼W
R72	13256653	Variable	20KΩ	
RA1	*13492660	Resistor Array	10KΩx8	
RA2	*13492297	Resistor Array	10KΩx4	
RA3	*13492660	Resistor Array	10KΩx8	

Ref. No.	Part No.	Description	
– Miscellaneous –			
CR	*13295158	OSC	6.971MHz
TP0-TP8	13189150	Test Point	
L1	*14723477	Coil, Choke	100mH
	13123334	Connector 64P	
	1627118472	Plate, Name	
	1678789500	Card Puller	
	16353540	Pin	1.5 x 8

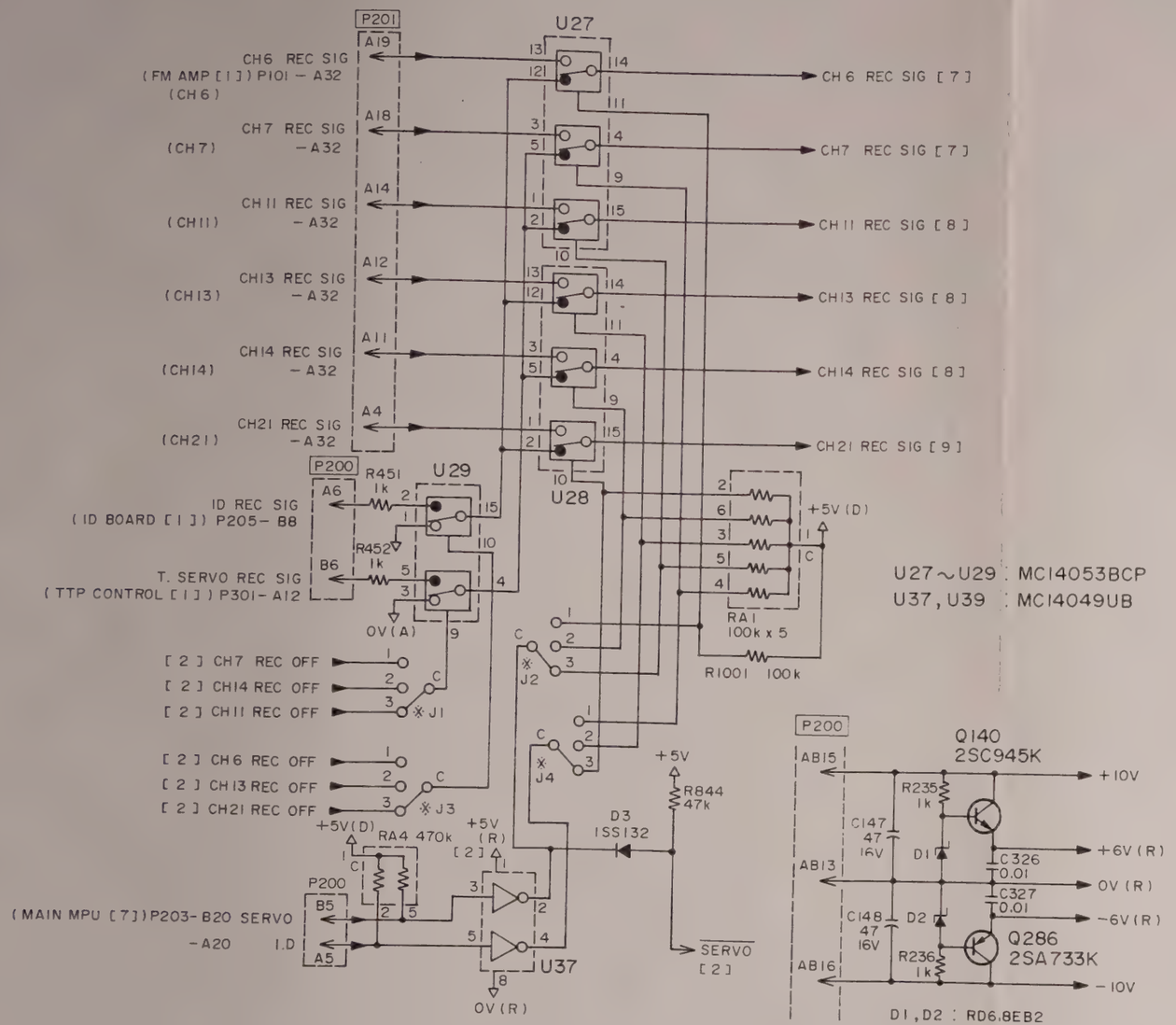

U27～U29 : MC14053BCP
U37, U39 : MC14049UB

※(NOTE) J1～J4

XR-	5000	7000
J1	2	3
J2	2	3
J3	2	3
J4	2	3

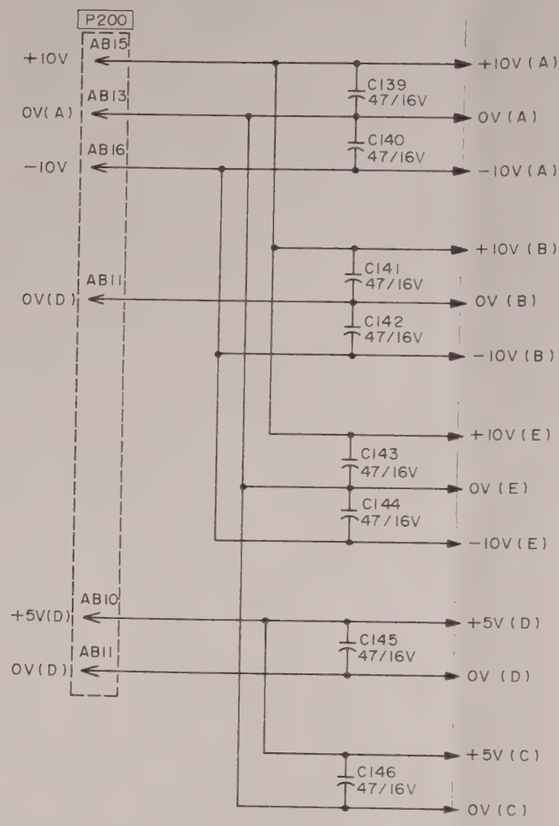

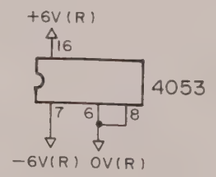

NOTE: UNLESS OTHERWISE SPECIFIED ALL RESISTORS ARE IN OHMS 1/4W, 5% AND ALL CAPACITORS ARE IN MICROFARADS.

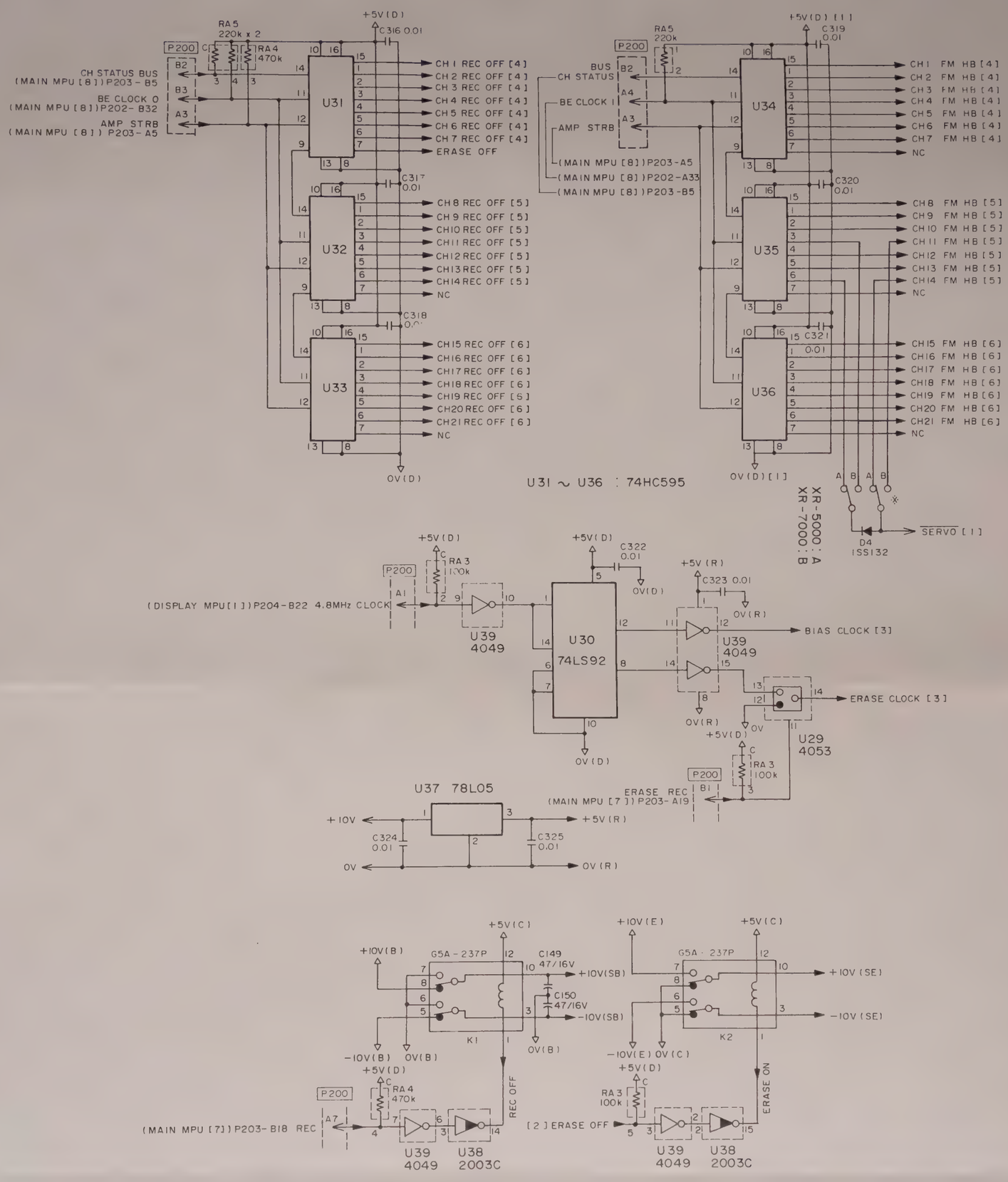

NOTE: UNLESS OTHERWISE SPECIFIED ALL RESISTORS ARE IN OHMS 1/4W, 5% AND ALL CAPACITORS ARE IN MICROFARADS.

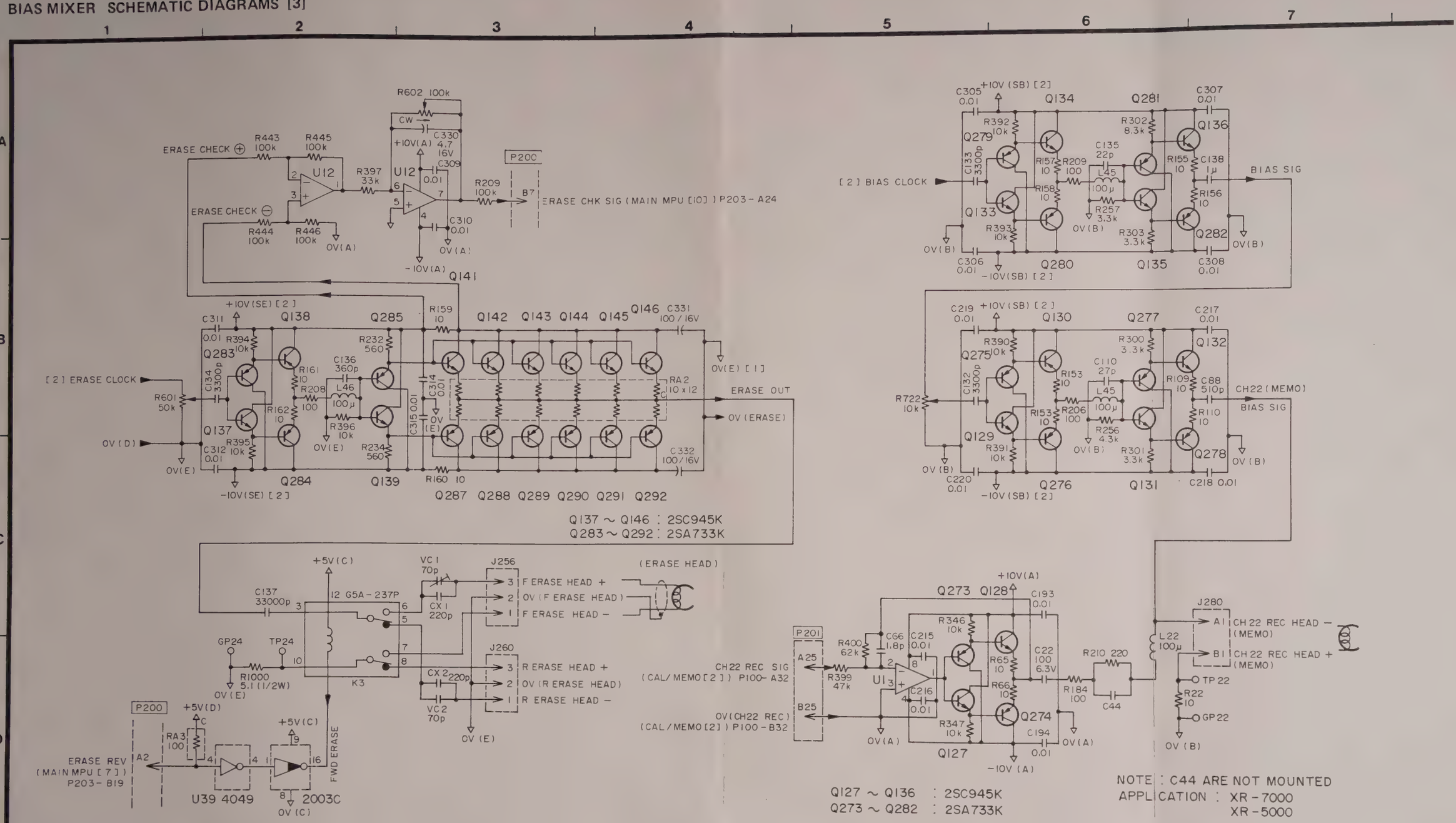

NOTE: UNLESS OTHERWISE SPECIFIED ALL RESISTORS ARE IN OHMS 1/4W, 5% AND ALL CAPACITORS ARE IN MICROFARADS.

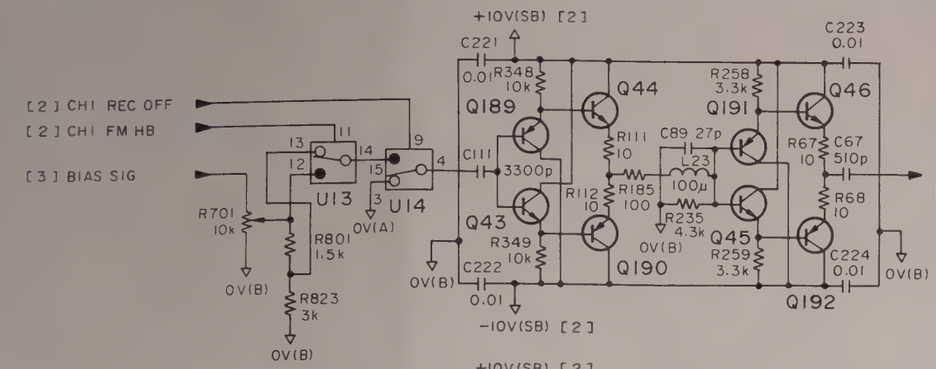

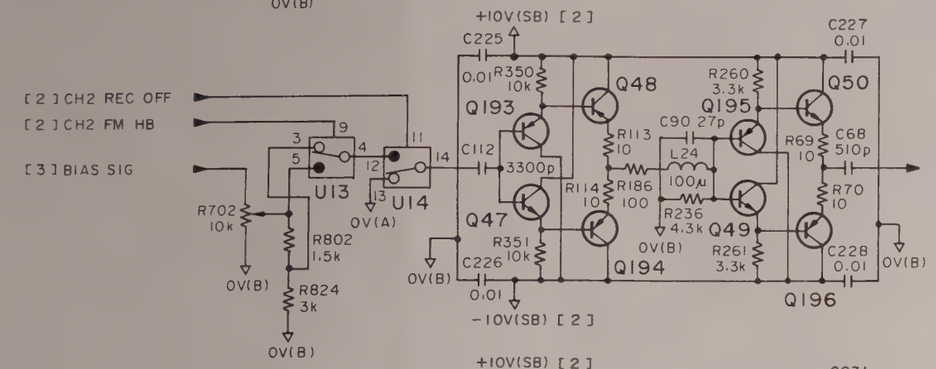

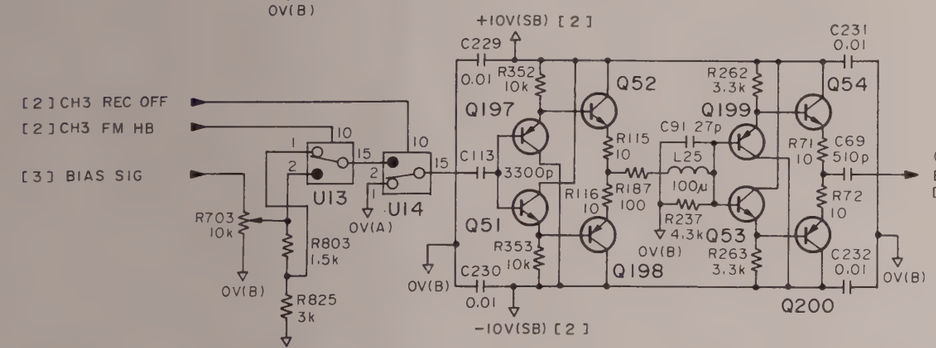

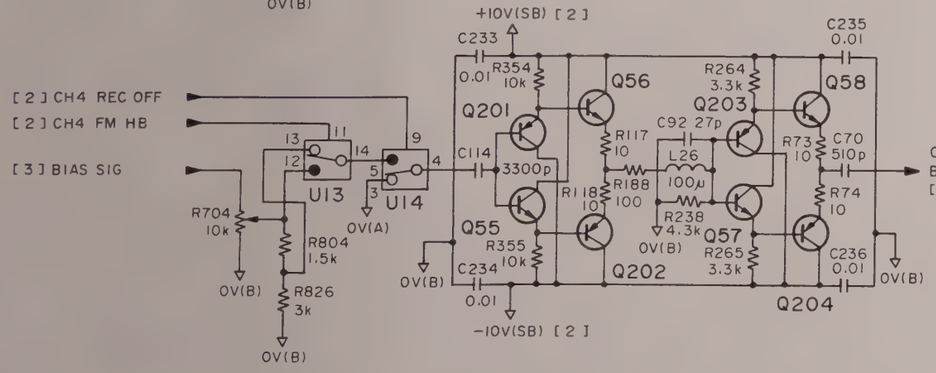

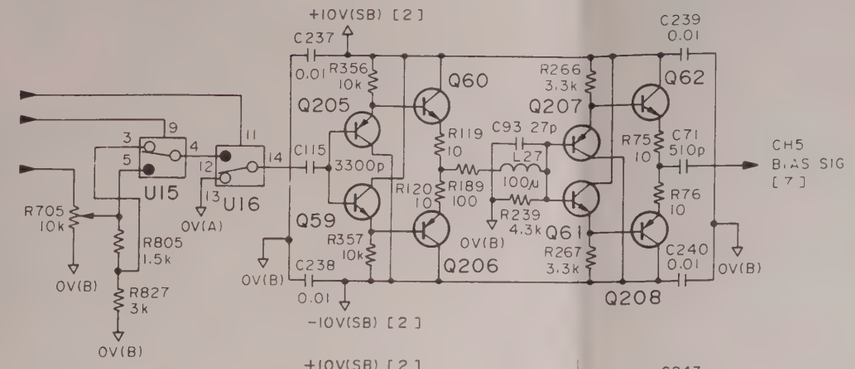

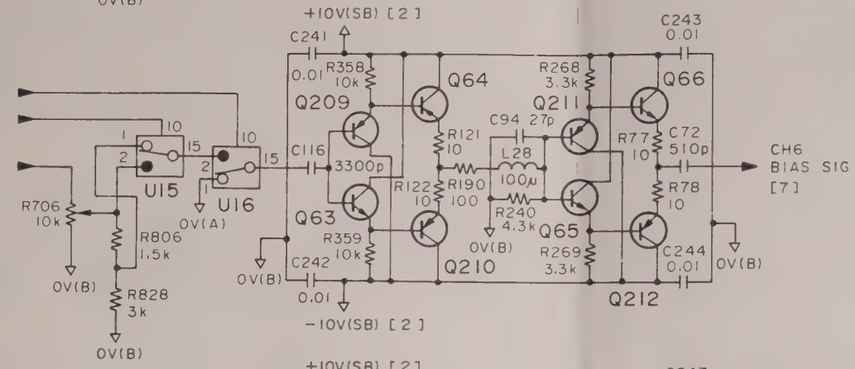

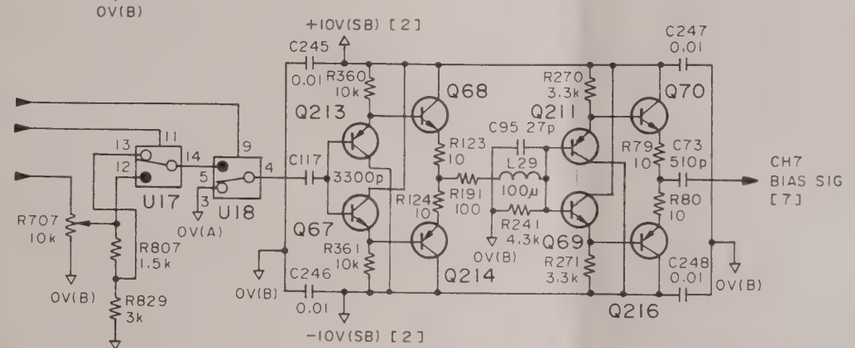

Q43 ~ 70 : 2SC945K
Q189 ~ 216 : 2SA733K
U13 ~ 18 : MC14053BCP

R235 ~ 241 : 4.3kΩ ±1%
C67 ~ 73 : 510pF ±5%

NOTE: UNLESS OTHERWISE SPECIFIED ALL RESISTORS ARE IN OHMS 1/4W, 5% AND ALL CAPACITORS ARE IN MICROFARADS.

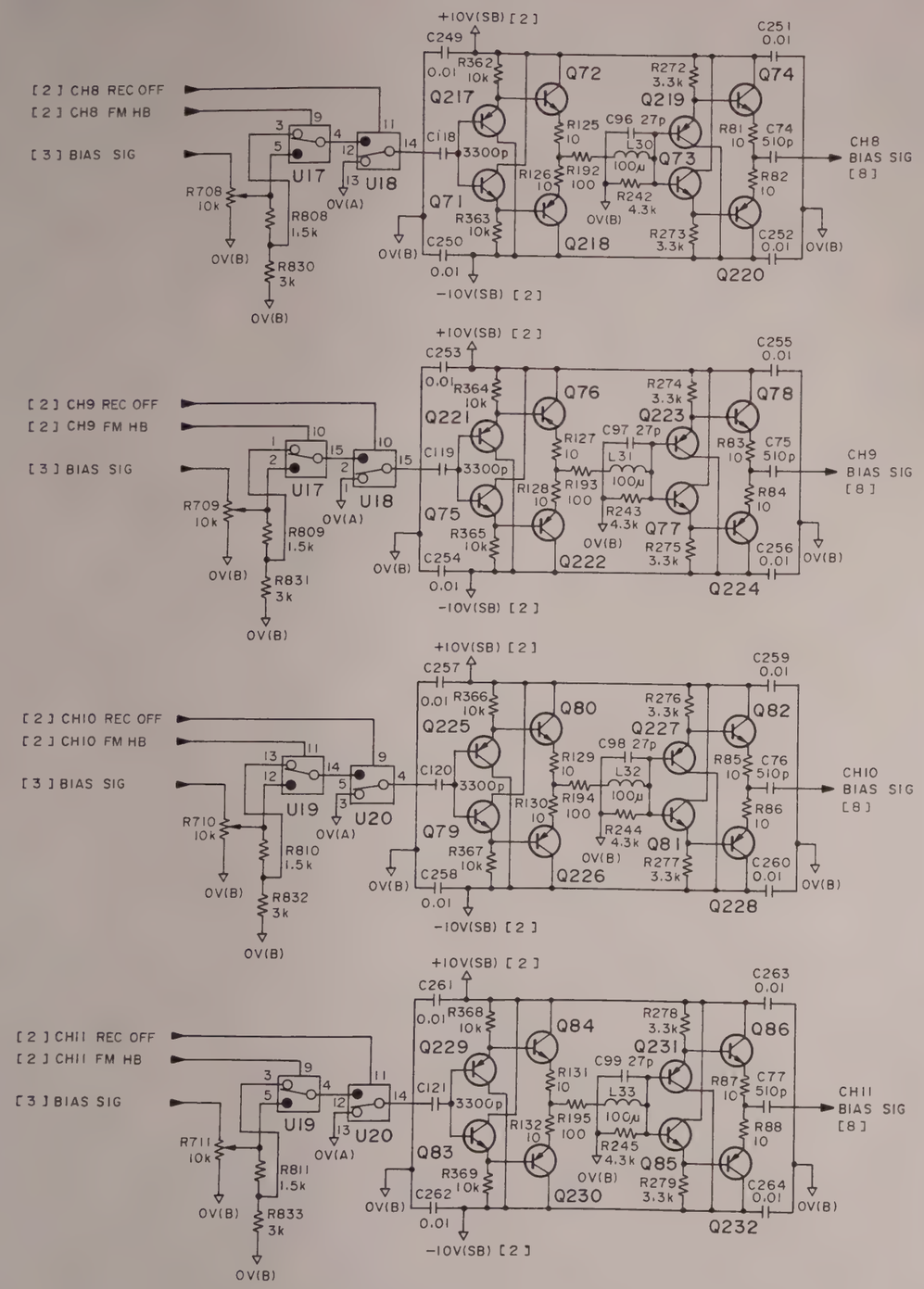

Q71 ~ 98 : 2SC945K
Q217 ~ 244 : 2SA733K
U17 ~ 22 : MC14053BCP

R242 ~ 248 : 4.3kΩ ±1%
C74 ~ 80 : 510pF ±5%

NOTE: UNLESS OTHERWISE SPECIFIED ALL RESISTORS ARE IN OHMS 1/4W, 5% AND ALL CAPACITORS ARE IN MICROFARADS.

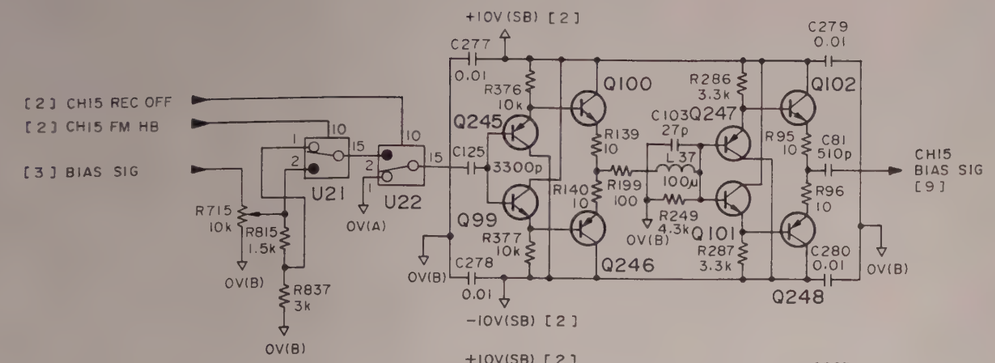

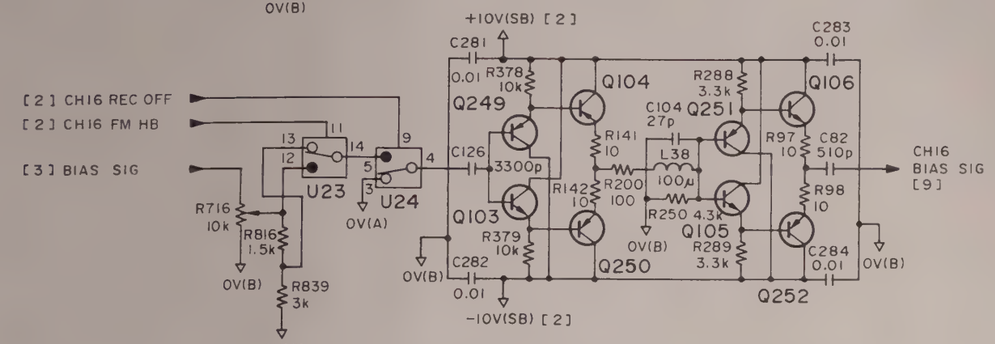

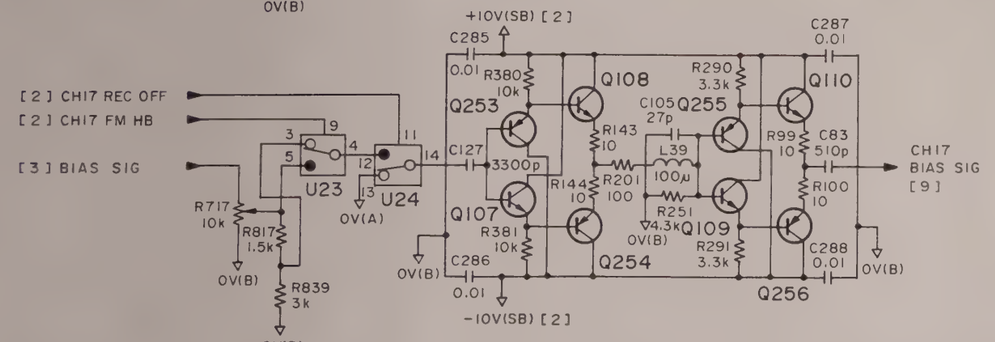

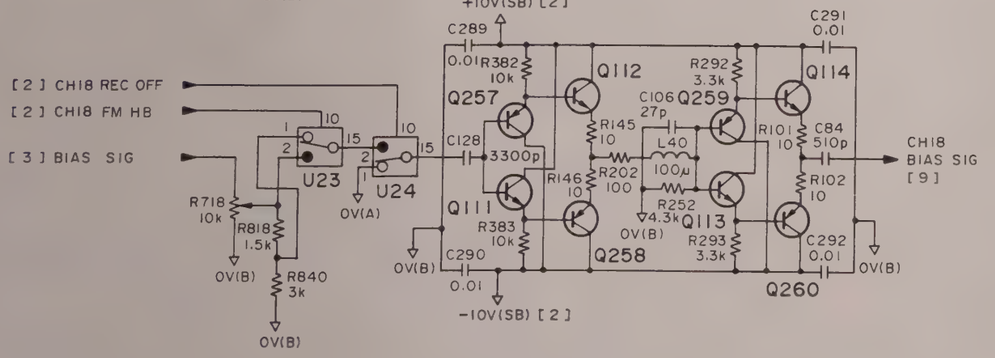

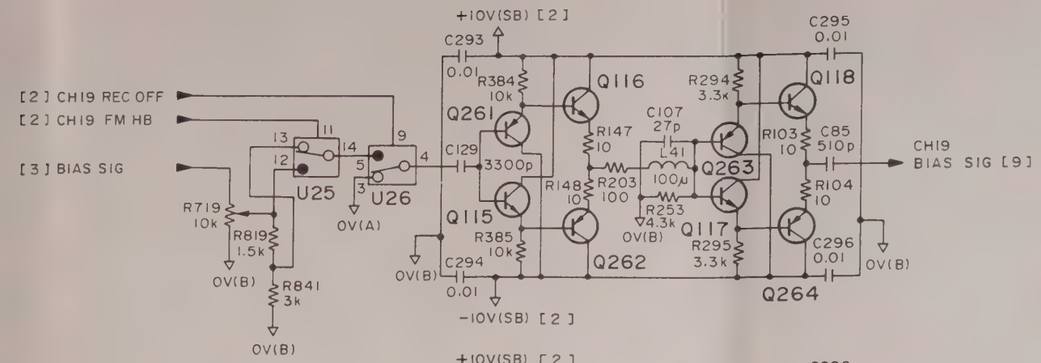

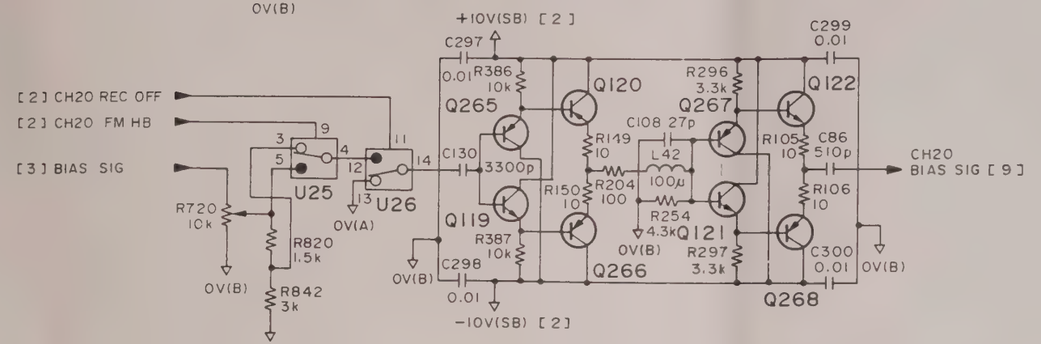

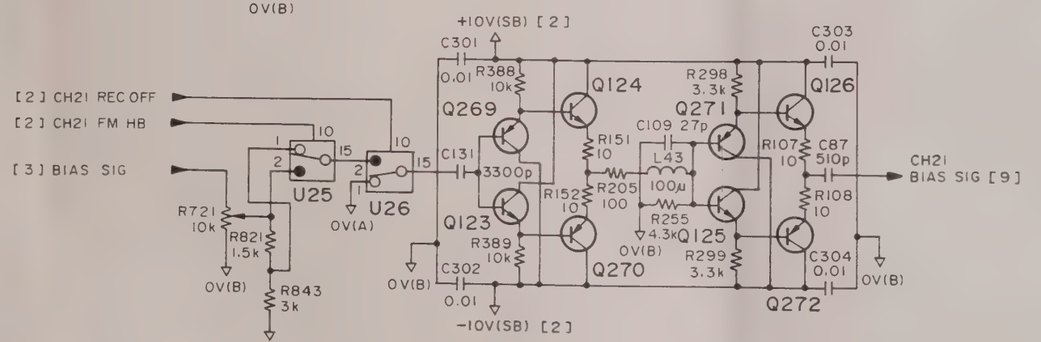

Q99 ∿ 126: 2SC945K
Q245 ∿ 272: 2SA733K
U21 ∿ 26: MC14053BCP

R249 ∼ 255 : 4.3kΩ ±1%
C81 ∼ 87 : 510pF ±5%

NOTE: UNLESS OTHERWISE SPECIFIED ALL RESISTORS ARE IN OHMS 1/4W, 5% AND ALL CAPACITORS ARE IN MICROFARADS.

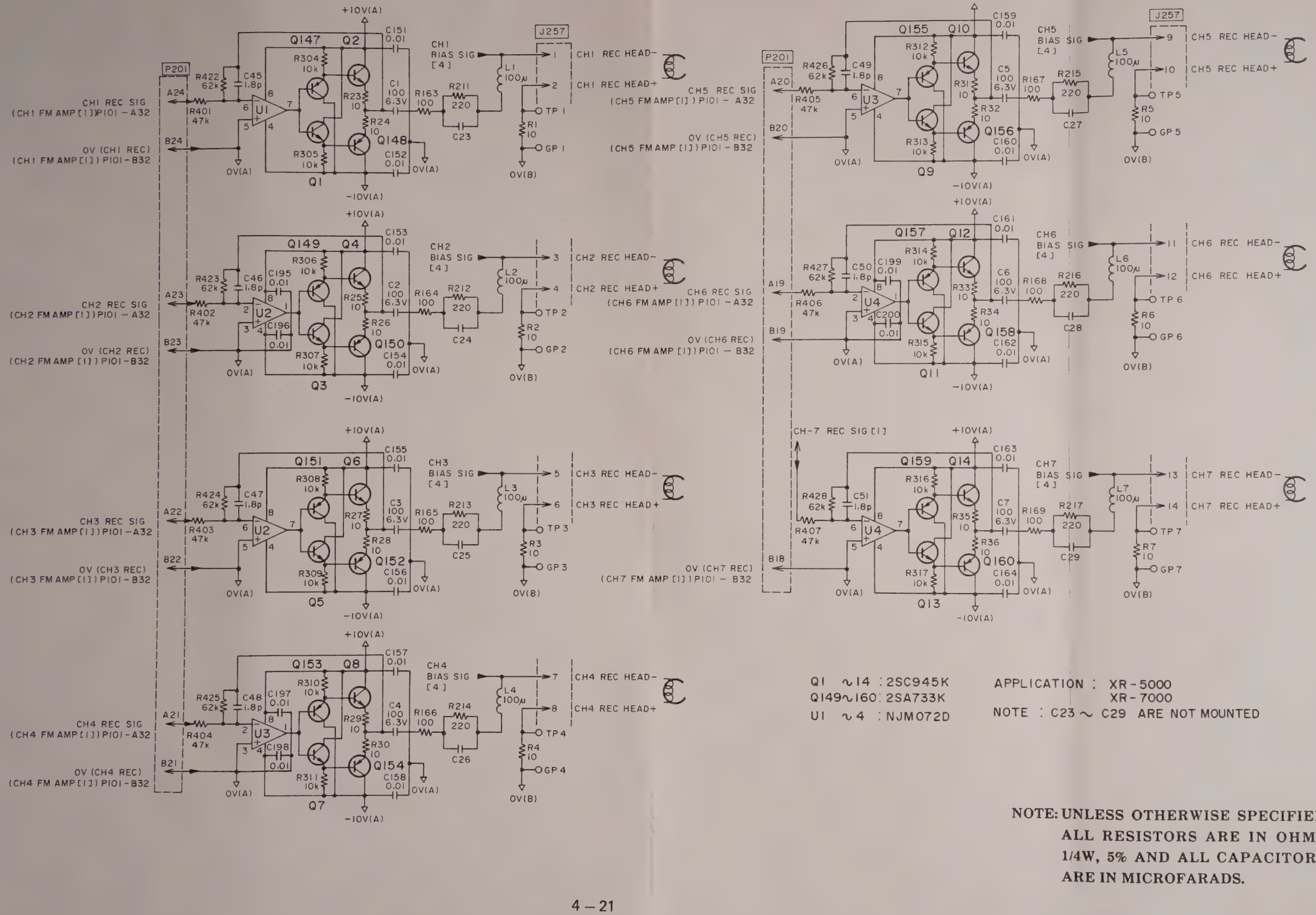

Q1 ~14 : 2SC945K
Q149~160: 2SA733K
U1 ~4 : NJM072D

APPLICATION : XR-5000
XR-7000
NOTE : C23 ~ C29 ARE NOT MOUNTED

NOTE: UNLESS OTHERWISE SPECIFIED ALL RESISTORS ARE IN OHMS 1/4W, 5% AND ALL CAPACITORS ARE IN MICROFARADS.

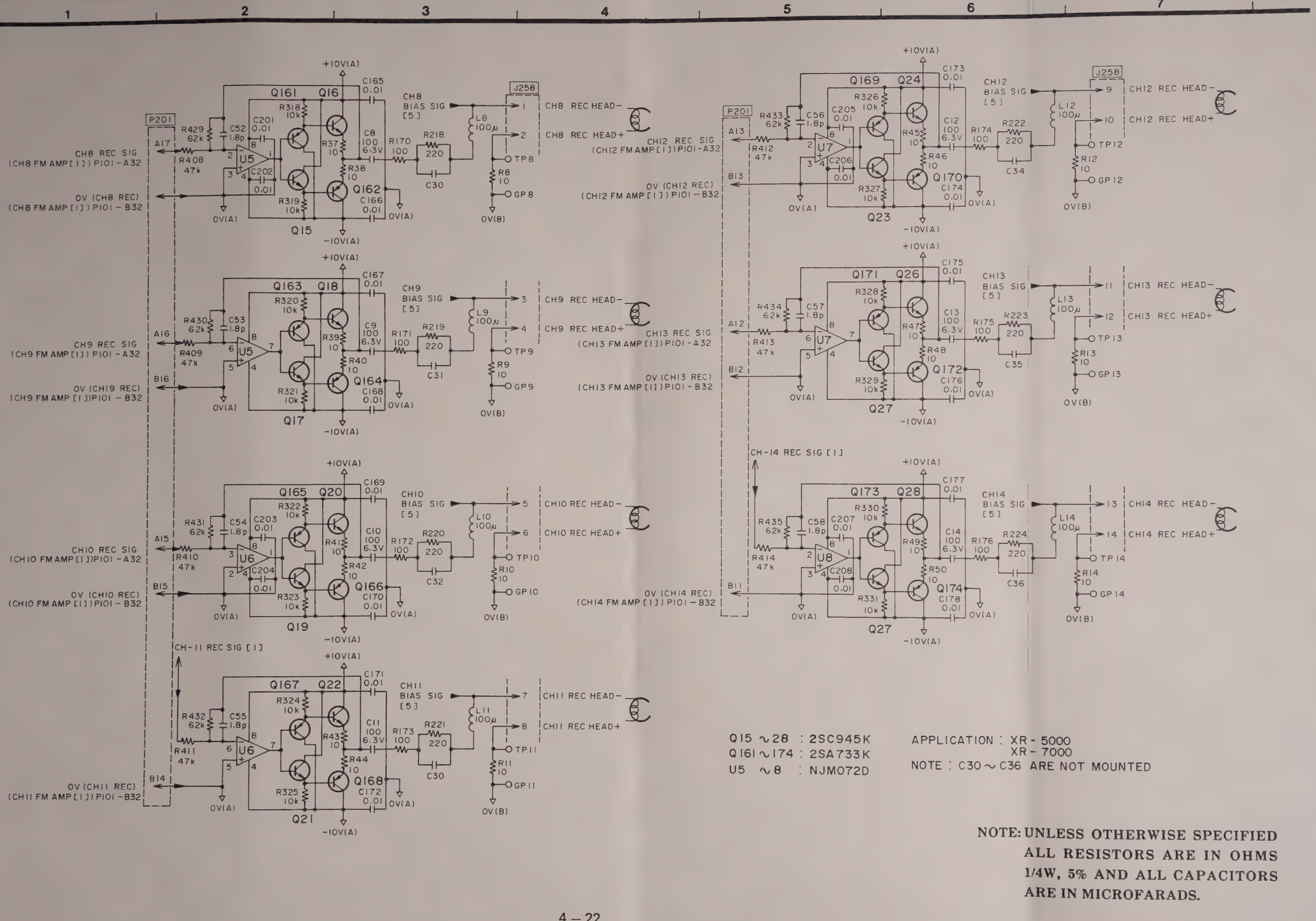

Q15 ∿28 : 2SC945K
Q161∿174 : 2SA733K
U5 ∿8 : NJM072D

APPLICATION : XR-5000
XR-7000
NOTE : C30 ∿ C36 ARE NOT MOUNTED

NOTE: UNLESS OTHERWISE SPECIFIED ALL RESISTORS ARE IN OHMS 1/4W, 5% AND ALL CAPACITORS ARE IN MICROFARADS.

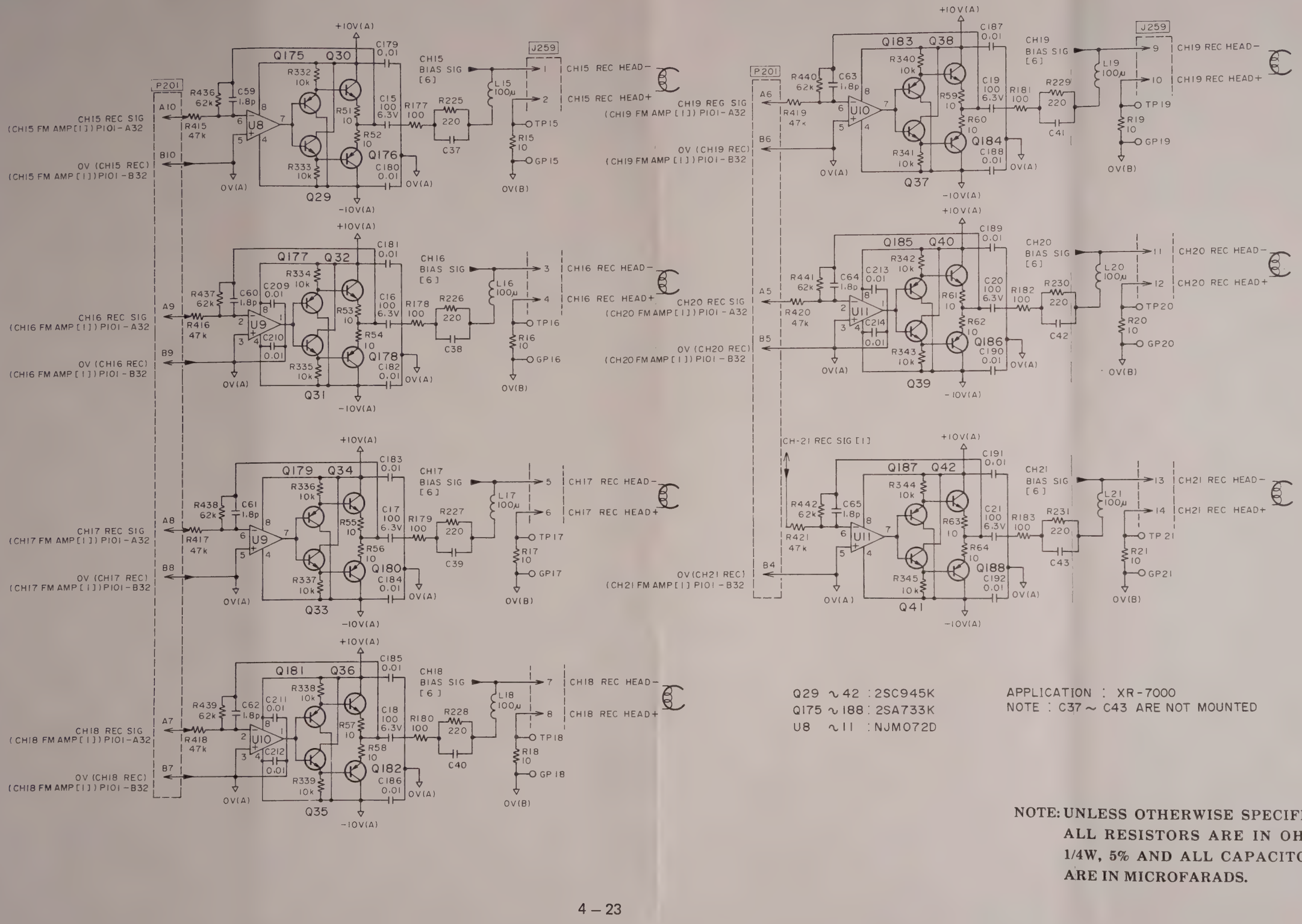

Q29 ~ 42 : 2SC945K
Q175 ~ 188 : 2SA733K
U8 ~ 11 : NJM072D

APPLICATION : XR-7000
NOTE : C37 ~ C43 ARE NOT MOUNTED

NOTE: UNLESS OTHERWISE SPECIFIED ALL RESISTORS ARE IN OHMS 1/4W, 5% AND ALL CAPACITORS ARE IN MICROFARADS.

PRINTED CIRCUIT BOARD – BIAS MIXER –

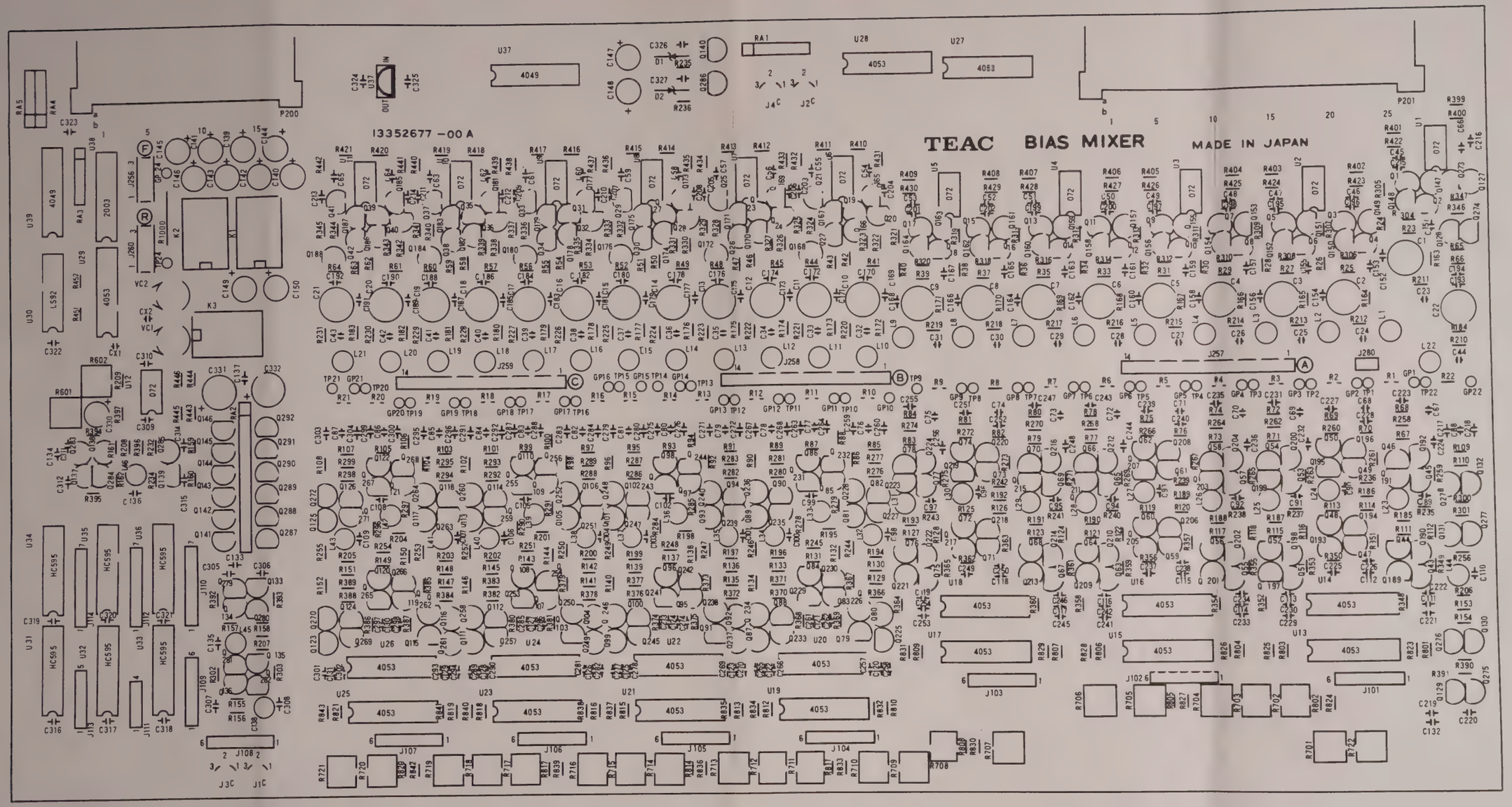

PARTS LIST – BIAS MIXER –

Ref. No.	Part No.	Description		
	1555267700	Bias Mixer PCBA		
– ICs –				
U1-U8	*13447334	IC	NJM072D	
U12	*13447334	IC	NJM072D	
U13-U22	*13441434	IC	MC14053BCP	
U27-U29	*13441434	IC	MC14053BCP	
U30	*13441524	IC	SN74LS92P	
U31-U36	*13442867	IC	MC74HC595N	
U37	*13441383	IC	MC14049BCP	
U38	*13428107	Transistor Array	μPC2003C	
U39	*13441383	IC	MC14049BCP	
U40	*13447243	IC	MC78L05ACP	
– Transistors –				
Q1-Q28	*13424134	Transistor	2SC945K	
Q43-Q98	*13424134	Transistor	2SC945K	
Q127-Q146	*13424134	Transistor	2SC945K	
Q147-Q174	*13421089	Transistor	2SA733K	
Q189-Q244	*13421089	Transistor	2SA733K	
Q273-Q292	*13421089	Transistor	2SA733K	
– Diodes –				
D1	*13415674	Zener Diode	RD6.8EB2	
D2	*13415674	Zener Diode	RD6.8EB2	
D3, D4	13411383	Diode	1SS132	
– Capasitors –				
C1-C14	12902051	Electrolytic	100μF	6.3V
C45-C58	12900432	Ceramic	1.8pF	100V
C66	12900432	Ceramic	1.8pF	100V
C67-C80	12451511	Metallized	510pF	100V
C88	12451511	Metallized	510pF	100V
C89-C102	12900446	Ceramic	27pF	100V
C110	12900446	Ceramic	27pF	100V
C111-C124	12901301	Ceramic	3300pF	100V
C132-C134	12901301	Ceramic	3300pF	100V
C135	12900445	Ceramic	22pF	100V
C136	12450361	Metallized	360pF	100V
C137	12450333	Metallized	0.033μF	100V
C138	12902093	Electrolytic	1μF	50V
C139-C150	12902015	Electrolytic	47μF	16V
C151-C178	12901325	Ceramic	0.01μF	63V
C193-C208	12901325	Ceramic	0.01μF	63V
C215-C276	12901325	Ceramic	0.01μF	63V
C305-C312	12901325	Ceramic	0.01μF	63V
C314-C327	12901325	Ceramic	0.01μF	63V
C330	12903800	Electrolytic	4.7μF	16V
C331	12082107	Electrolytic	100μF	16V
C332	12082107	Electrolytic	100μF	16V
CX1	12450221	Metallized	220pF	100V
CX2	12450221	Metallized	220pF	100V
VC1	12899011	Trimer		
VC2	12899011	Trimer		
– Resistors –				
R1-R14	11066100	Metal Film	10Ω	1/5W
R22-R50	11066100	Metal Film	10Ω	1/5W
R65-R94	11066100	Metal Film	10Ω	1/5W
R109-R138	11066100	Metal Film	10Ω	1/5W
R153-R162	11066100	Metal Film	10Ω	1/5W
R163-R176	11066101	Metal Film	100Ω	1/5W
R184-R198	11066101	Metal Film	100Ω	1/5W
R206-R209	11066101	Metal Film	100Ω	1/5W
R210-R224	11066221	Metal Film	220Ω	1/5W
R232	11066561	Metal Film	560Ω	1/5W

Ref. No.	Part No.	Description		
R234	11066561	Metal Film	560Ω	1/5W
R235-R248	11066432	Metal Fiml	4.3KΩ	1/5W
R256	11066432	Metal Film	4.3KΩ	1/5W
R257-R285	11066332	Metal Film	3.3KΩ	1/5W
R300-R303	11066332	Metal Film	3.3KΩ	1/5W
R304-R331	11066103	Metal Film	10KΩ	1/5W
R346-R375	11066103	Metal Film	10KΩ	1/5W
R390-R396	11066103	Metal Film	10KΩ	1/5W
R397	11066333	Metal Film	33KΩ	1/5W
R399	11066473	Metal Film	47KΩ	1/5W
R400	11066623	Metal Film	62KΩ	1/5W
R401-R414	11066473	Metal Film	47KΩ	1/5W
R422-R435	11066623	Metal Film	62KΩ	1/5W
R443-R446	11066104	Metal Film	100KΩ	1/5W
R451	11173102	Carbon	1KΩ	¼W
R452	11173102	Carbon	1KΩ	¼W
R601	*13257187	Variable	50KΩ	
R602	*13257188	Variable	100KΩ	
R701-R714	*13257199	Variable	10KΩ	
R722	*13257199	Variable	10KΩ	
R801-R814	11066152	Metal Film	1.5KΩ	1/5W
R823-R836	11066302	Metal Film	3KΩ	1/5W
R844	11172473	Carbon	47KΩ	¼W
R1000	11195519	Carbon	5.1Ω	½W
R1001	11172104	Carbon	100KΩ	¼W
RA1	*13492442	Resistor Array	100KΩx5	
RA2	*13493072	Resistor Array	10Ωx12	
RA3	*13492321	Resistor Array	100KΩx4	
RA4	*13492337	Resistor Array	470KΩx4	
RA5	*13492329	Resistor Array	220KΩx4	
– Miscellaneous –				
TP1-TP14	13189150	Test Point	MK1095	
TP22	13189150	Test Point	MK1095	
TP24	13189150	Test Point	MK1095	
CP1-GP14	13189150	Test Point	MK1095	
GP22	13189150	Test Point	MK1095	
GP24	13189150	Test Point	MK1095	
J256	13151827	Connector 3P		
J257	13151837	Connector 15P		
J258	13151837	Connector 15P		
J260	13151827	Connector 3P		
J280	13151826	Connector 2P		
K1-K3	*13203497	Relay 5V	G5A-237P, 5V	
L1-L14	*14722080	Coil, Choke	100μH	
L22	*14722080	Coil, Choke	100μH	
L23-L36	*14722080	Coil, Choke	100μH	
L44-L46	*14722080	Coil, Choke	100μH	
P200	13123332	Connector 32P		
P201	13121113	Connector 50P		
	16353540	Pin 1.5 x 8		
	1678789500	Cord Puller		

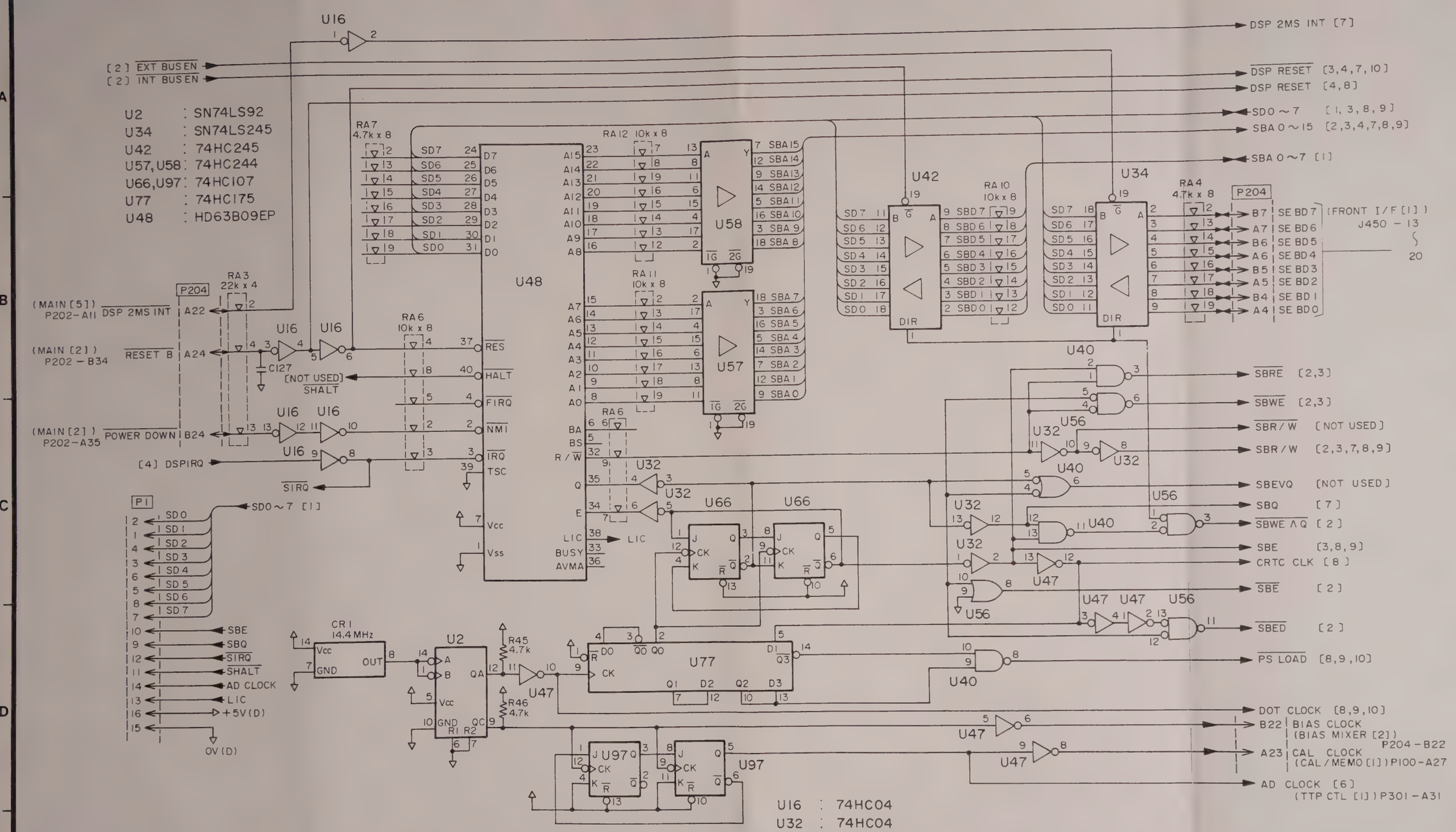

NOTE: UNLESS OTHERWISE SPECIFIED ALL RESISTORS ARE IN OHMS 1/4W, 5% AND ALL CAPACITORS ARE IN MICROFARADS.

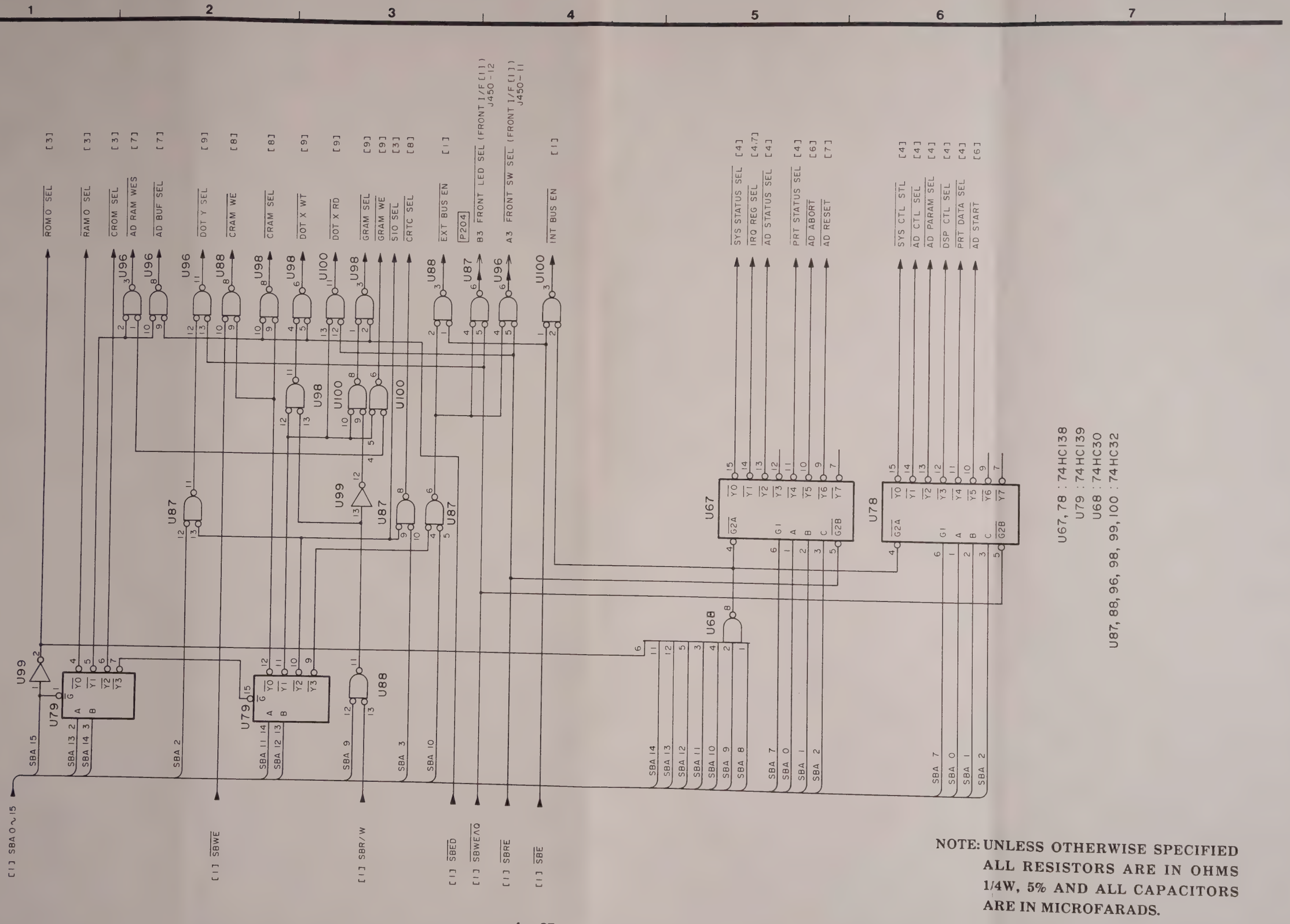

U67, 78 : 74HC138
U79 : 74HC139
U68 : 74HC30
U87, 88, 96, 98, 99, 100 : 74HC32

NOTE: UNLESS OTHERWISE SPECIFIED ALL RESISTORS ARE IN OHMS 1/4W, 5% AND ALL CAPACITORS ARE IN MICROFARADS.

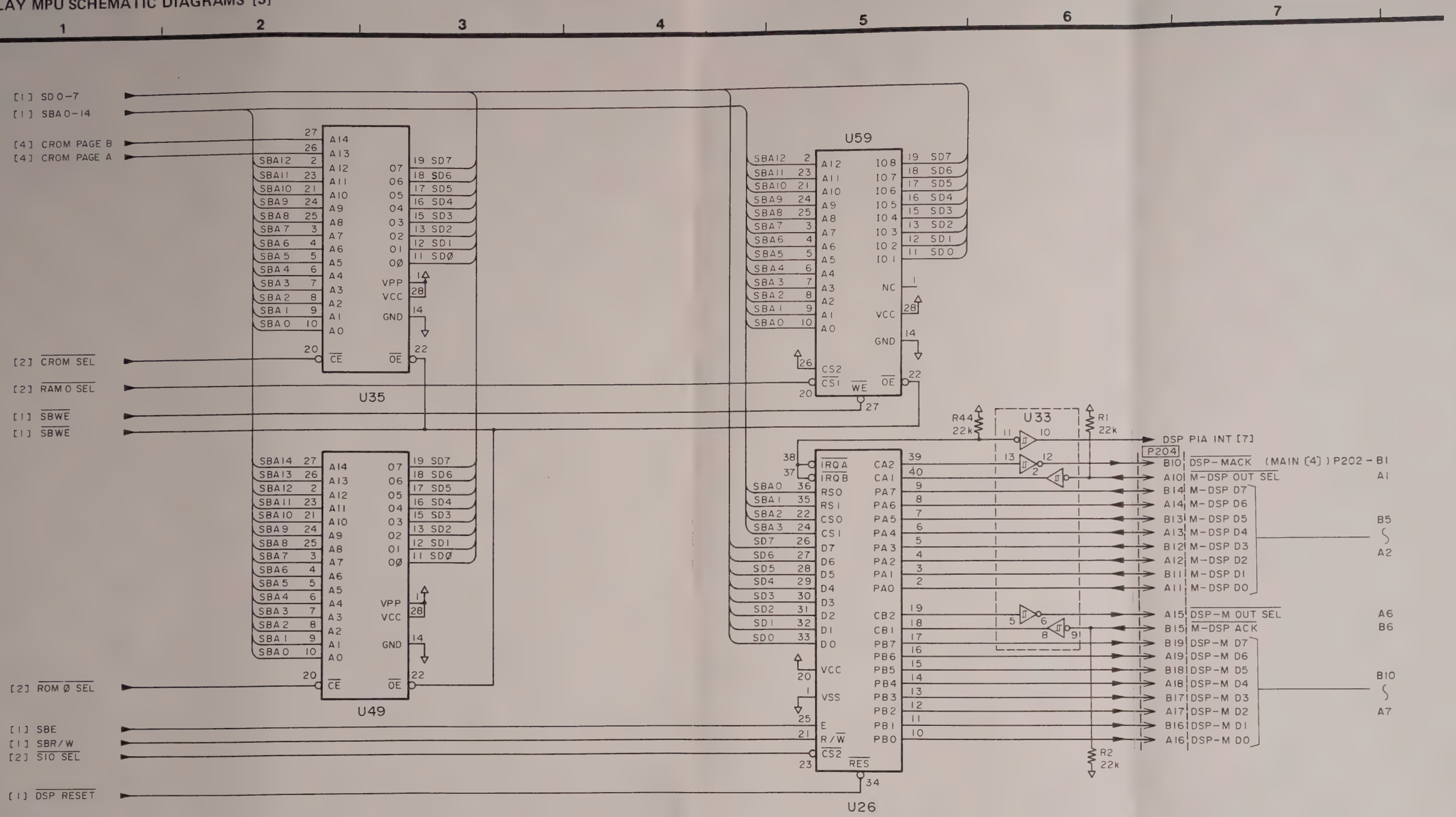

U26 : HD6321P
U35 : 13700107-00(HN27C256G-20)
U49 : 13700106-00(HN27C256G-20)
U59 : HM6264ALSP-15

NOTE: UNLESS OTHERWISE SPECIFIED ALL RESISTORS ARE IN OHMS 1/4W, 5% AND ALL CAPACITORS ARE IN MICROFARADS.

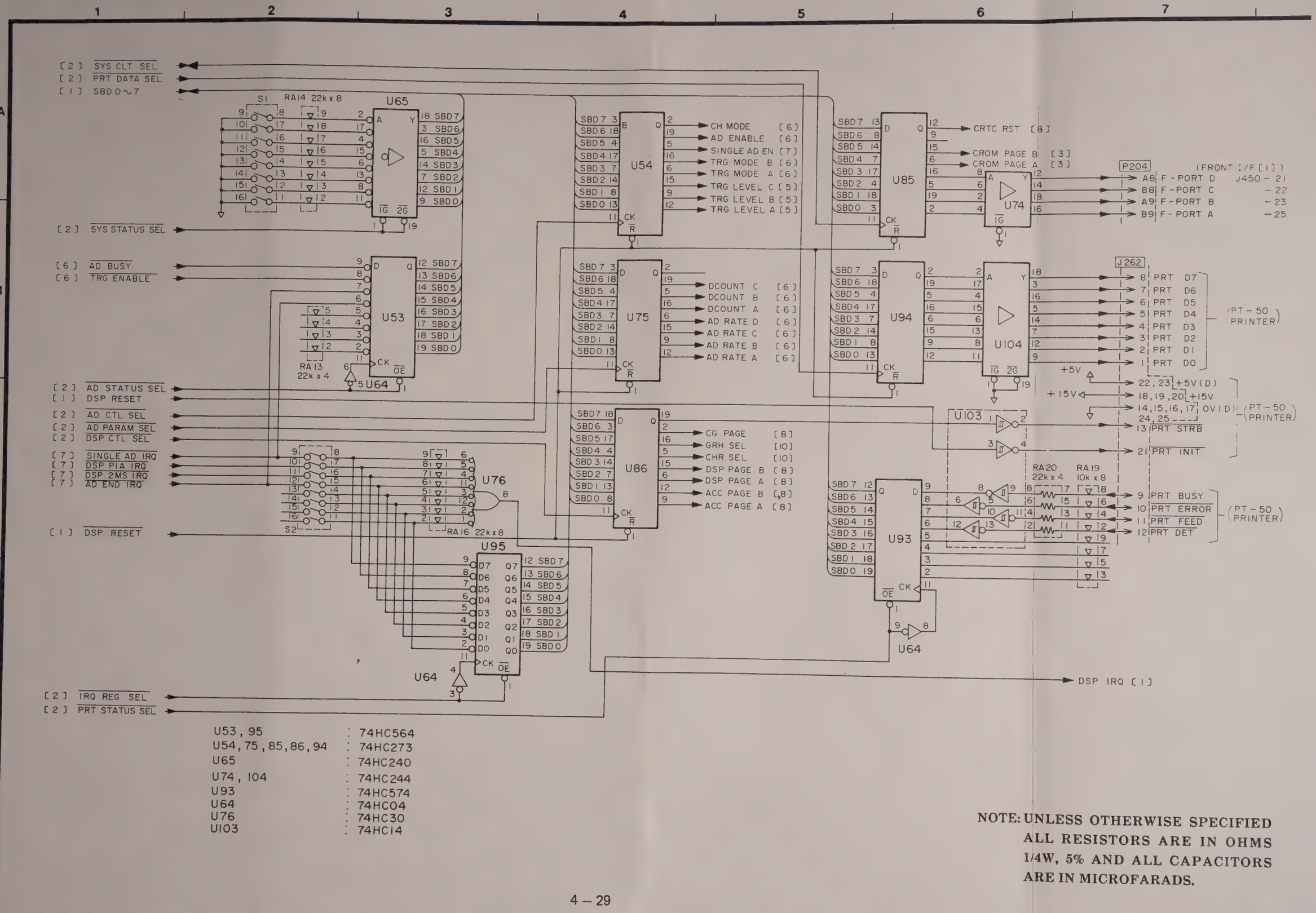

U53, 95	: 74HC564
U54, 75, 85, 86, 94	: 74HC273
U65	: 74HC240
U74, 104	: 74HC244
U93	: 74HC574
U64	: 74HC04
U76	: 74HC30
U103	: 74HC14

NOTE: UNLESS OTHERWISE SPECIFIED ALL RESISTORS ARE IN OHMS 1/4W, 5% AND ALL CAPACITORS ARE IN MICROFARADS.

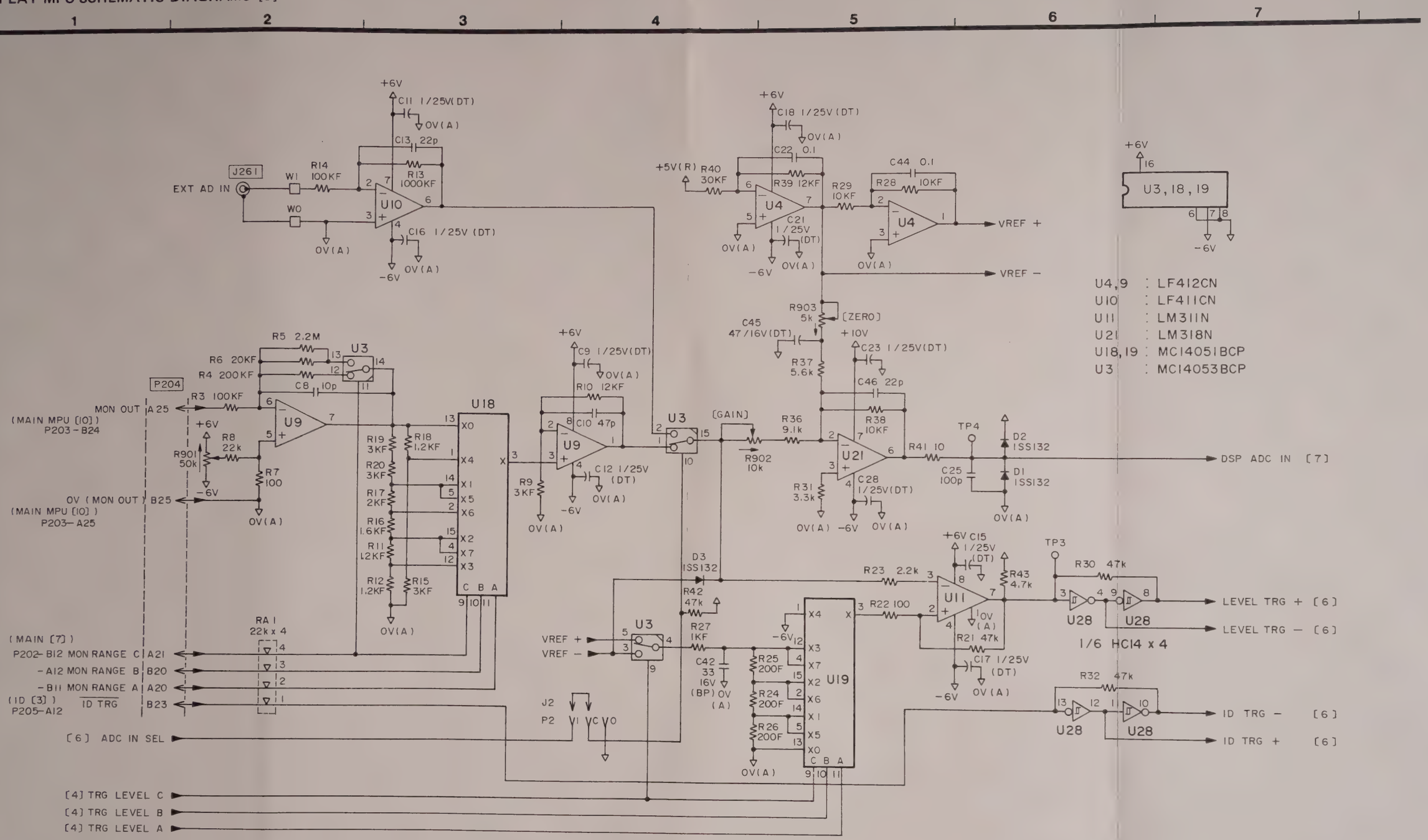

NOTE: UNLESS OTHERWISE SPECIFIED ALL RESISTORS ARE IN OHMS 1/4W, 5% AND ALL CAPACITORS ARE IN MICROFARADS.

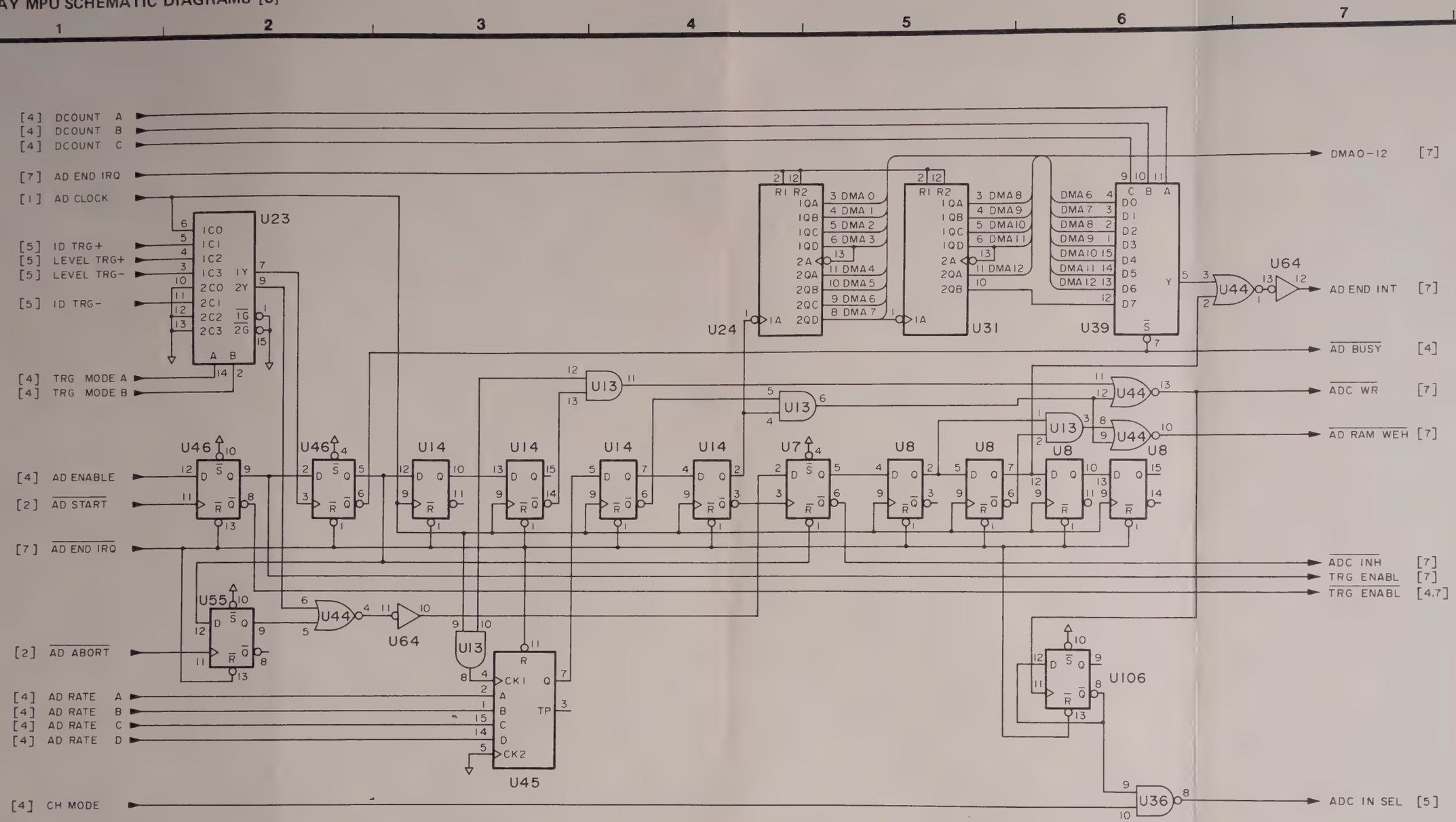

U7, 46, 55, 106	: 74HC74
U8, 14	: 74HC175
U23	: 74HC153
U23, 31	: 74HC393
U39	: 74HC151
U45	: 74HC294

NOTE: UNLESS OTHERWISE SPECIFIED ALL RESISTORS ARE IN OHMS 1/4W, 5% AND ALL CAPACITORS ARE IN MICROFARADS.

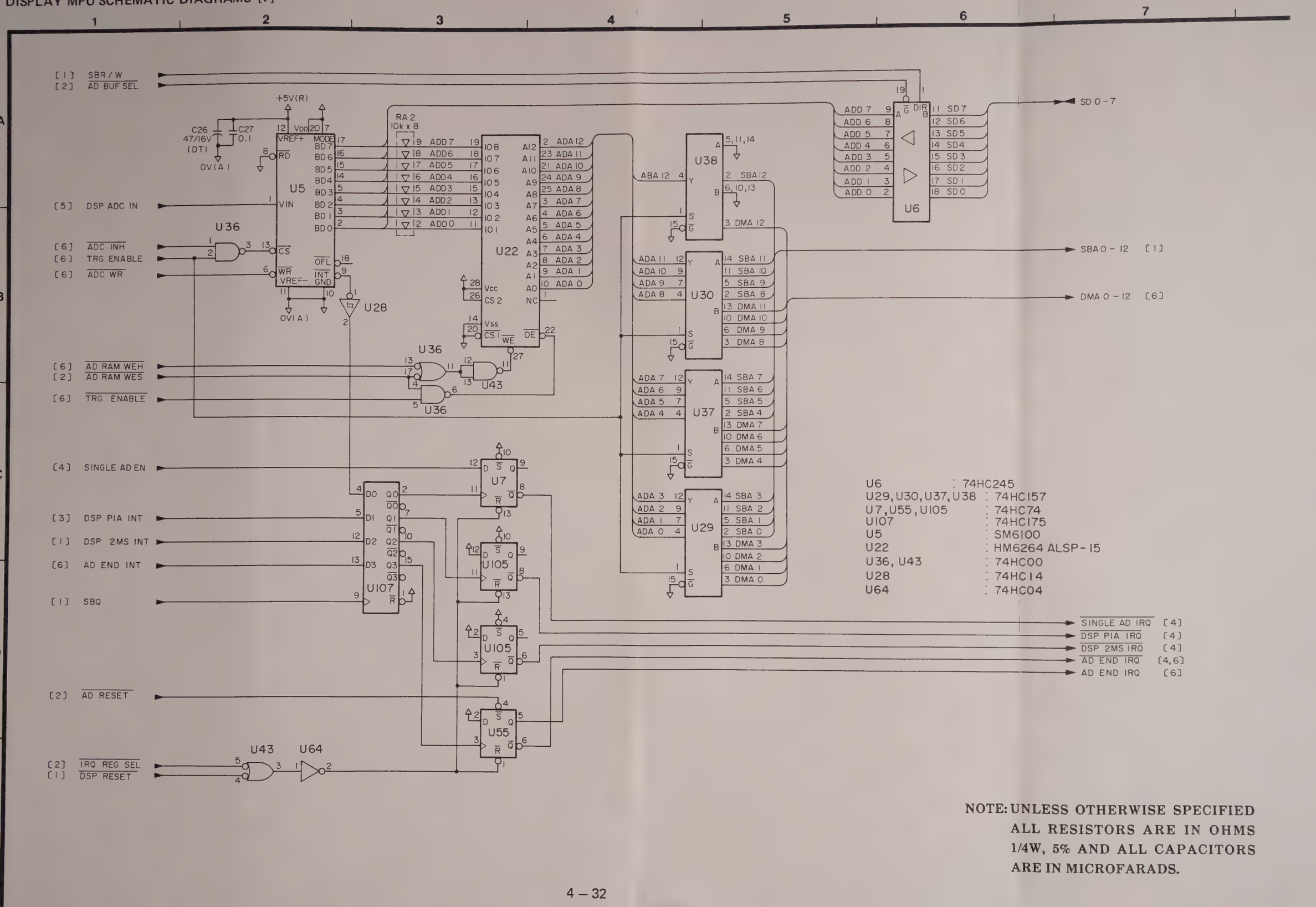

U6 : 74HC245
U29, U30, U37, U38 : 74HC157
U7, U55, U105 : 74HC74
U107 : 74HC175
U5 : SM6100
U22 : HM6264 ALSP-15
U36, U43 : 74HC00
U28 : 74HC14
U64 : 74HC04

NOTE: UNLESS OTHERWISE SPECIFIED ALL RESISTORS ARE IN OHMS 1/4W, 5% AND ALL CAPACITORS ARE IN MICROFARADS.

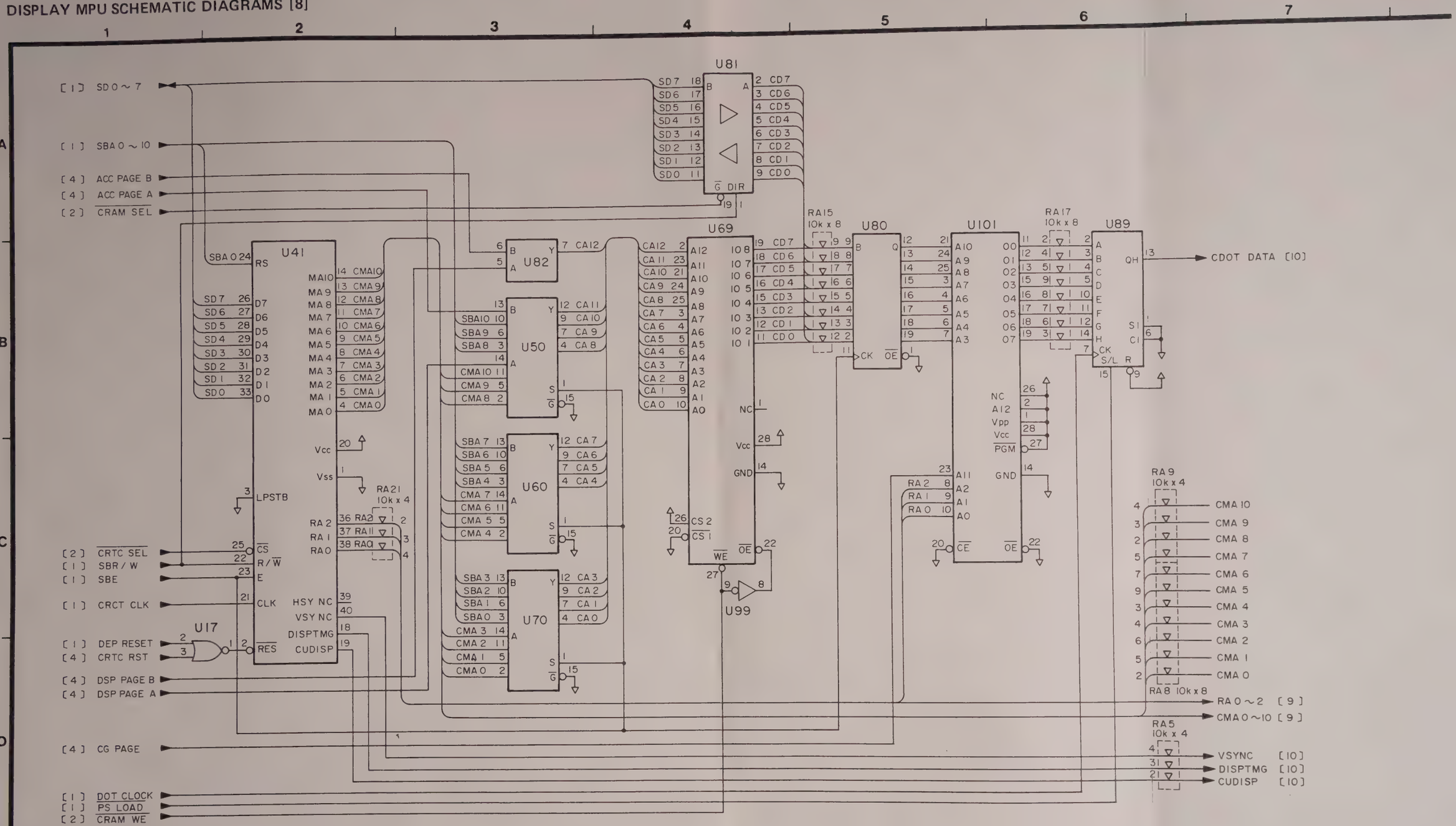

U50,60,70,82	: 74HC157	U41	: HD6345P
U80	: 74HC574	U69	: HM6264ALSP-15
U81	: 74HC245	U101	: 13700108-00 (HN27C64G-20)
U89	: 74HC166	U17	: 74HC02
		U99	: 74HC04

NOTE: UNLESS OTHERWISE SPECIFIED ALL RESISTORS ARE IN OHMS 1/4W, 5% AND ALL CAPACITORS ARE IN MICROFARADS.

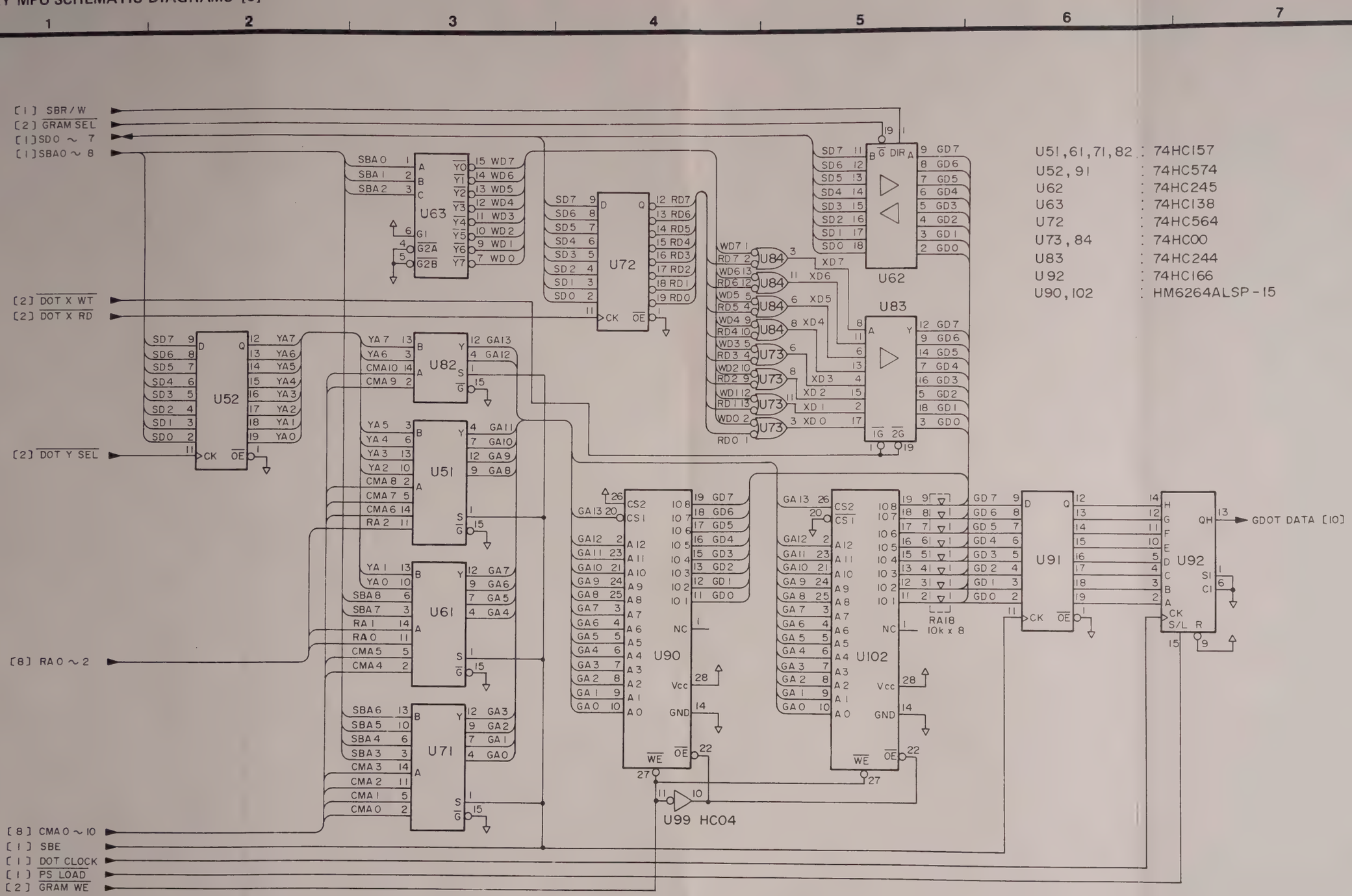

U51,61,71,82	: 74HC157
U52, 91	: 74HC574
U62	: 74HC245
U63	: 74HC138
U72	: 74HC564
U73, 84	: 74HC00
U83	: 74HC244
U92	: 74HC166
U90, 102	: HM6264ALSP-15

NOTE: UNLESS OTHERWISE SPECIFIED ALL RESISTORS ARE IN OHMS 1/4W, 5% AND ALL CAPACITORS ARE IN MICROFARADS.

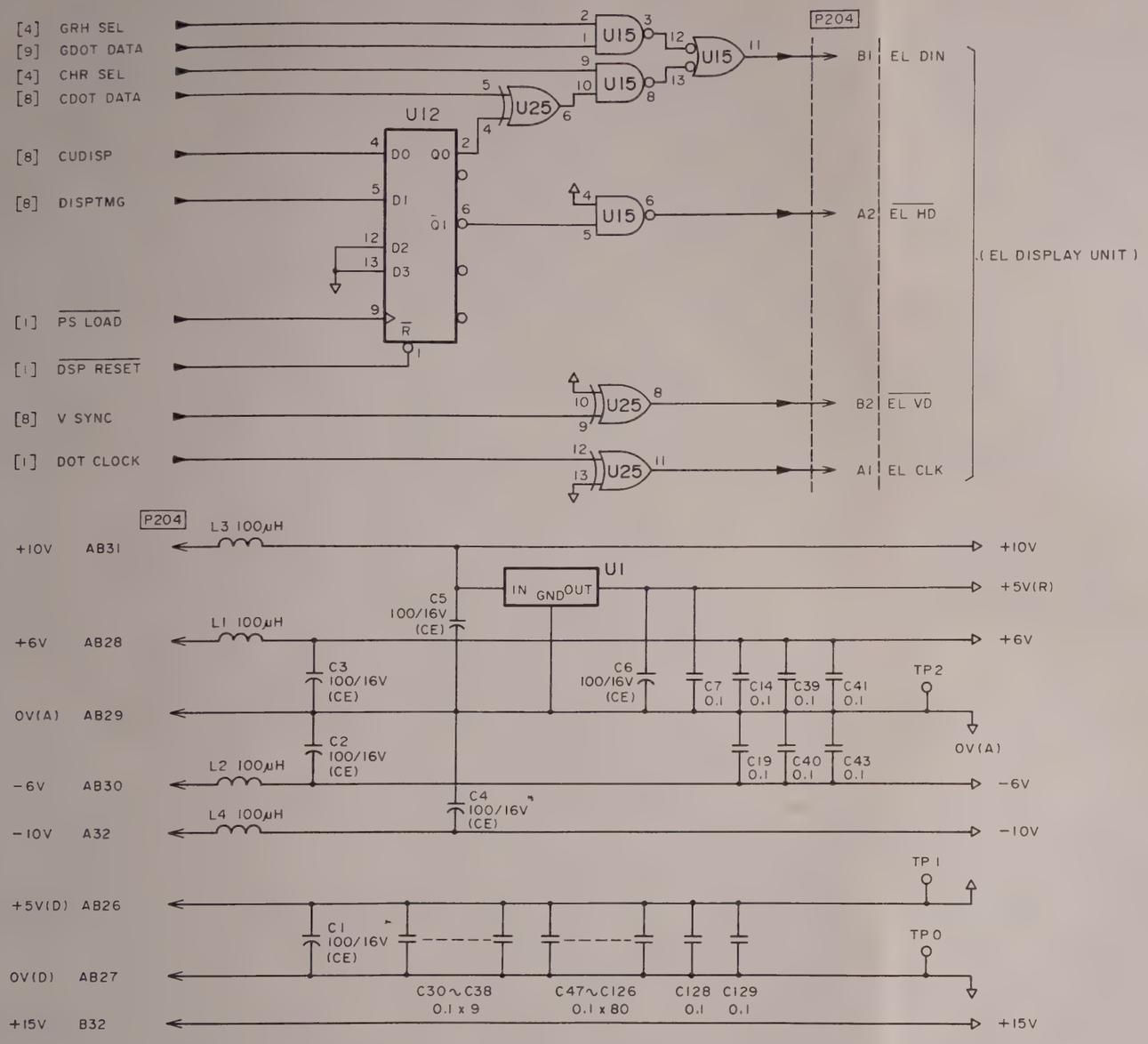

U1 : 78L05
U12 : 74HC175
U15 : SN74LS00
U25 : SN74LS86

NOTE: UNLESS OTHERWISE SPECIFIED ALL RESISTORS ARE IN OHMS 1/4W, 5% AND ALL CAPACITORS ARE IN MICROFARADS.

PRINTED CIRCUIT BOARD – DISPLAY MPU –

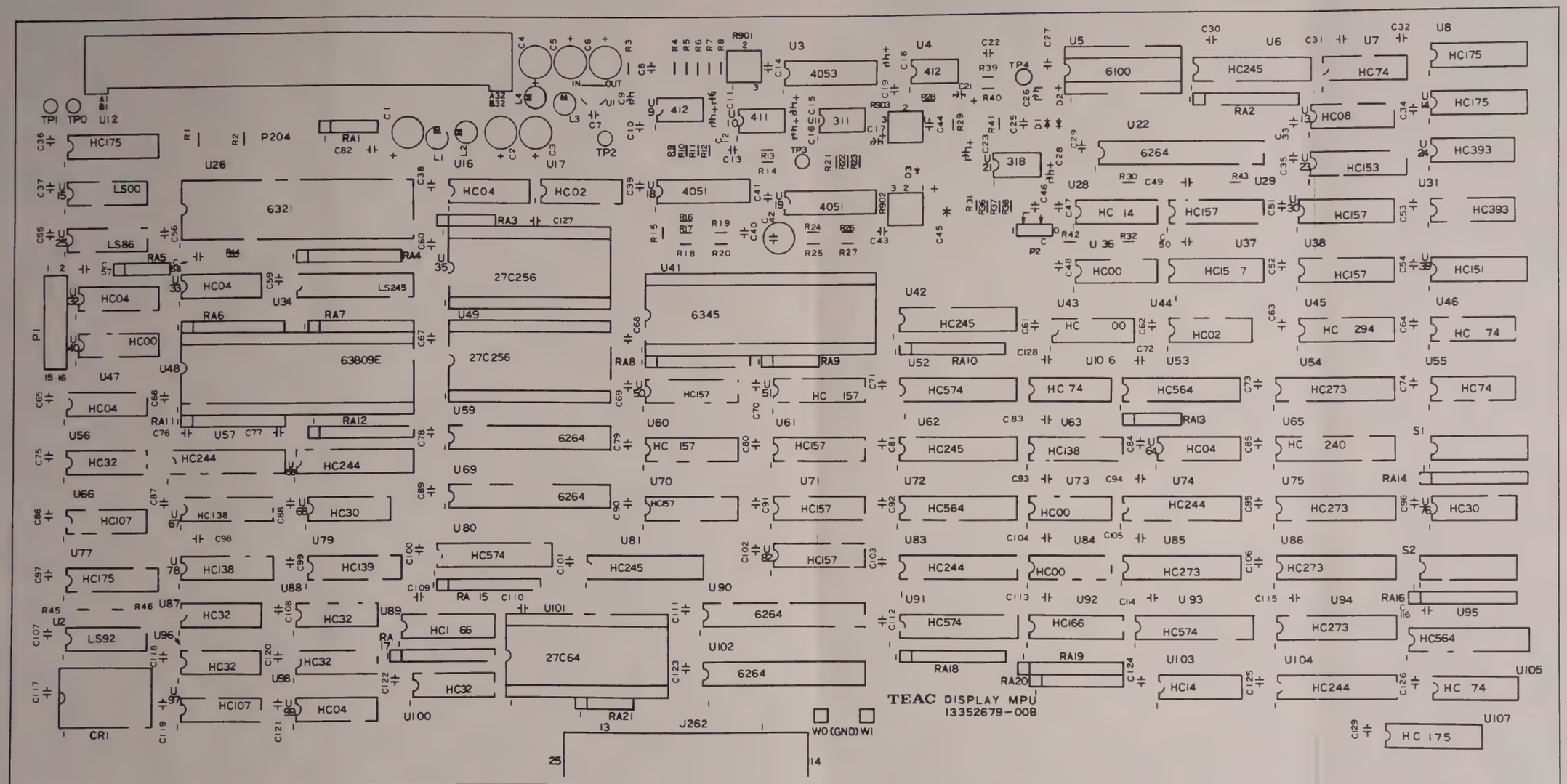

Ref. No.	Part No.	Description	
	1555267900	Display MPU PCBA	
– ICs –			
U1	*13447243	IC	MC78L05ACP
U2	*13441524	IC	SN74LS92N
U3	*13441434	IC	MC14053BCP
U4	*13447373	IC	LF412CN
U5	*13442945	IC	SM6100
U6	*13442689	IC	MC74HC245N
U7	*13442077	IC	MC74HC74N
U8	*13442673	IC	MC74HC175N
U9	*13447374	IC	LF412CN
U10	*13447367	IC	LF411CN
U11	*13447239	IC	LM311N
U12	*13442673	IC	MC74HC175N
U13	*13442094	IC	MC74HC08N
U14	*13442673	IC	MC74HC175N
U15	*13441231	IC	SN74LS00N
U16	*13442151	IC	MC74HC04N
U17	*13442321	IC	MC74HC02N
U18	*13441441	IC	MC14051BCP
U19	*13441441	IC	MC14051BCP
U21	*13447137	IC	LM318N
U22	*13443067	IC	HM6264ALSP-15
U23	*13442665	IC	MC74HC153N
U24	*13442093	IC	MC74HC393N
U25	*13441500	IC	SN74LS86N
U26	*13443054	IC	HD6321P
U28	*13442641	IC	MC74HC14N
U29	*13442667	IC	MC74HC157N
U30	*13442667	IC	MC74HC393N
U31	*13442093	IC	MC74HC393N
U32	*13442151	IC	MC74HC04N
U33	*13442151	IC	MC74HC04N
U34	*13441561	IC	SN74LS245N
U36	*13442078	IC	MC74HC00N
U37	*13442667	IC	MC74HC157N
U38	*13442667	IC	MC74HC157N
U39	*13442664	IC	MC74HC151N
U40	*13442078	IC	MC74HC00N
U41	*13443063	IC	HD6345P
U42	*13442689	IC	MC74HC245N
U43	*13442078	IC	MC74HC00N
U44	*13442321	IC	MC74HC02N
U45	*13443158	IC	MC74HC294N
U46	*13442077	IC	MC74HC74N
U47	*13442151	IC	MC74HC04N
U48	*13443052	IC	HD63B09EP
U50	*13442667	IC	MC74HC157N
U51	*13442667	IC	MC74HC157N
U52	*13443083	IC	MC74HC574N
U53	*13443082	IC	MC74HC564N
U54	*13442695	IC	MC74HC273N
U55	*13442077	IC	MC74HC74N
U56	*13442645	IC	MC74HC32N
U57	*13442688	IC	MC74HC244N
U58	*13442688	IC	MC74HC244N
U59	*13443067	IC	HM6264ALSP-15
U60	*13442667	IC	MC74HC157N
U61	*13442667	IC	MC74HC157N
U62	*13442689	IC	MC74HC245N
U63	*13442661	IC	MC74HC138N
U64	*13442151	IC	MC74HC04N
U65	*13442152	IC	MC74HC240N
U66	*13442652	IC	MC74HC107N
U67	*13442661	IC	MC74HC138N
U68	*13442644	IC	MC74HC30N
U69	*13443067	IC	HM6264ALSP-15
U70	*13442667	IC	MC74HC157N
U71	*13442667	IC	MC74HC157N
U72	*13443082	IC	MC74HC564N
U73	*13442078	IC	MC74HC00N
U74	*13442688	IC	MC74HC244N

Ref. No.	Part No.	Description	
U75	*13442695	IC	MC74HC273N
U76	*13442644	IC	MC74HC30N
U77	*13442673	IC	MC74HC175N
U78	*13442661	IC	MC74HC138N
U79	*13442662	IC	MC74HC139N
U80	*13443083	IC	MC74HC574N
U81	*13442689	IC	MC74HC245N
U82	*13442667	IC	MC74HC157N
U83	*13442688	IC	MC74HC244N
U84	*13442078	IC	MC74HC00N
U85	*13442695	IC	MC74HC273N
U86	*13442695	IC	MC74HC273N
U87	*13442645	IC	MC74HC32N
U88	*13442645	IC	MC74HC32N
U89	*13443079	IC	HD74HC166P
U90	*13443067	IC	HM6264ALSP-15
U91	*13443083	IC	MC74HC574N
U92	*13443079	IC	HD74HC166P
U93	*13443083	IC	MC74HC574N
U94	*13442695	IC	MC74HC273N
U95	*13443082	IC	MC74HC564N
U96	*13442645	IC	MC74HC32N
U97	*13442652	IC	MC74HC107N
U98	*13442645	IC	MC74HC32N
U99	*13442151	IC	MC74HC04N
U100	*13442645	IC	MC74HC32N
U102	*13443067	IC	HM6264ALSP-15
U103	*13442641	IC	MC74HC14N
U104	*13442688	IC	MC74HC244N
U105	*13442077	IC	MC74HC74N
U106	*13442077	IC	MC74HC74N
U107	*13442673	IC	MC74HC175N
– Diodes –			
D1	*13411383	Diode	1SS132
D2	*13411383	Diode	1SS132
D3	*13411383	Diode	1SS132
– Capacitors –			
C1-C6	12904097	Electrolytic	100µF 16V
C7	12416104	Ceramic	0.1µF 50V
C8	12900441	Ceramic	10pF 100V
C9	12901483	Tantalum	1µF 25V
C10	12900449	Ceramic	47pF 100V
C11	12901483	Tantalum	1µF 25V
C12	12901483	Tantalum	1µF 25V
C13	12900445	Ceramic	22pF 100V
C14	12416104	Ceramic	0.1µF 50V
C15-C18	12901483	Tantalum	1µF 25V
C19	12416104	Ceramic	0.1µF 50V
C21	12901483	Tantalum	1µF 25V
C22	12416104	Ceramic	0.1µF 50V
C23	12901483	Tantalum	1µF 25V
C25	12900453	Ceramic	100pF 100V
C26	12904267	Tantalum	47µF 16V
C27	12416104	Ceramic	0.1µF 50V
C28	12904267	Tantalum	47µF 16V
C29	12416104	Ceramic	0.1µF 50V
C30-C38	12901325	Ceramic	0.01µF 63V
C39	12416104	Ceramic	0.1µF 50V
C40	12416104	Ceramic	0.1µF 50V
C41	12416104	Ceramic	0.1µF 50V
C42	12904072	Electrolytic	33µF 16V
C43	12416104	Ceramic	0.01µF 63V
C44	12416104	Ceramic	0.01µF 63V
C45	12904267	Tantalum	47µF 16V
C46	12900445	Ceramic	22pF 100V
C47-C126	12901325	Ceramic	0.01µF 63V
C128	12901325	Ceramic	0.01µF 63V
C129	12901325	Ceramic	0.01µF 63V

Ref. No.	Part No.	Description		
– Resistors –				
R1	11172223	Carbon	22KΩ	¼W
R2	11172223	Carbon	22KΩ	¼W
R3	11983115	Metal Film	100KΩ	¼W
R4	11983144	Metal Film	200KΩ	¼W
R5	11172225	Carbon	2.2MΩ	¼W
R6	11983048	Metal Film	20KΩ	¼W
R7	11172101	Carbon	100Ω	¼W
R8	11172223	Carbon	22KΩ	¼W
R9	11054302	Metal Film	3KΩ	¼W
R10	11054123	Metal Film	12KΩ	¼W
R11	11054122	Metal Film	1.2KΩ	¼W
R12	11054122	Metal Film	1.2KΩ	¼W
R13	11983115	Metal Film	100KΩ	¼W
R14	11983115	Metal Film	100KΩ	¼W
R15	11054302	Metal Film	3KΩ	¼W
R16	11054162	Metal Film	1.6KΩ	¼W
R17	11982952	Metal Film	2KΩ	¼W
R18	11054122	Metal Film	1.2KΩ	¼W
R19	11054302	Metal Film	3KΩ	¼W
R20	11054302	Metal Film	3KΩ	¼W
R21	11172473	Carbon	47KΩ	¼W
R22	11172101	Carbon	100Ω	¼W
R23	11172222	Carbon	2.2KΩ	¼W
R24	11982856	Metal Film	200Ω	¼W
R25	11982856	Metal Film	200Ω	¼W
R26	11982856	Metal Film	200Ω	¼W
R27	11982923	Metal Film	1KΩ	¼W
R28	11983019	Metal Film	10KΩ	¼W
R29	11983019	Metal Film	10KΩ	¼W
R30	11172473	Ceramic	47KΩ	¼W
R31	11172332	Ceramic	3.3KΩ	¼W
R32	11172473	Ceramic	47KΩ	¼W
R36	11172912	Ceramic	9.1KΩ	¼W
R37	11172562	Ceramic	5.6KΩ	¼W
R38	11983019	Metal Film	10KΩ	¼W
R39	11054123	Metal Film	12KΩ	¼W
R40	11054303	Metal Film	30KΩ	¼W
R41	11172100	Carbon	10Ω	¼W
R42	11172473	Carbon	47KΩ	¼W
R43	11172472	Carbon	4.7KΩ	¼W
R44	11172223	Carbon	22KΩ	¼W
R45	11172472	Carbon	4.7KΩ	¼W
R46	11172472	Carbon	4.7KΩ	¼W
R901	*13257187	Variable	50KΩ	
R902	*13257185	Variable	10KΩ	
R903	*13257184	Variable	5KΩ	
RA1	*13497768	Resistor Array	22KΩx4	
RA2	*13497866	Resistor Array	10KΩx8	
RA3	*13497768	Resistor Array	22KΩx4	
RA4	*13497864	Resistor Array	4.7KΩx8	
RA5	*13497766	Resistor Array	10KΩx4	

Ref. No.	Part No.	Description	
RA6	*13497866	Resistor Array	10KΩx8
RA7	*13497864	Resistor Array	4.7KΩx8
RA8	*13497866	Resistor Array	10KΩx8
RA9	*13497766	Resistor Array	10KΩx4
RA10	*13497866	Resistor Array	10KΩx8
RA11	*13497866	Resistor Array	10KΩx8
RA12	*13497866	Resistor Array	10KΩx8
RA13	*13497768	Resistor Array	22KΩx4
RA14	*13497868	Resistor Array	22KΩx8
RA15	*13497866	Resistor Array	10KΩx8
RA16	*13497868	Resistor Array	22KΩx8
RA17	*13497866	Resistor Array	10KΩx8
RA18	*13497866	Resistor Array	10KΩx8
RA19	*13497866	Resistor Array	10KΩx8
RA20	*13498227	Resistor Array	22KΩx8
RA21	*13497766	Resistor Array	10KΩx4
– Miscellaneous –			
TP0-TP4	13189150	Test Point	
CR1	*13295156	OSC	14.400MHz
J2	13299047	Plug, Short	Z-128
J261	*13101682	Connector 64P	BNC245-BR
J262	13123320	Connector 64P	17LE-13250-27 (D4AD)
P1	13122794	Connector 64P	FCN-724P016-AU/W
P2	13151114	Connector 64P	Z-149-3P
P204	13123334	Connector 64P	
L1-L4	*14723477	Coil, Choke	100μH
S1	*13225405	Switch, Dip	DSS708
S2	*13225405	Switch, Dip	DSS708
	*13299473	Socket, IC	IC26-2003-GS4
	*13299479	Socket, IC	IC26-2806-GS4
	*13299482	Socket, IC	IC26-4006-GS4
	1370010600	Memory, IC	NXR Disp-PRG
	1370010700	Memory, IC	NXR Disp-Crom
	1370010800	Memory, IC	NXR Disp-CG
	1627118469	Plate, Name	
	1680351600	Bracket, Display	
	16410010	Screw, Bind	2.6 x 10 SZMC
	16498766	Screw, Pan	2.6 x 6
	1678789500	Card Puller	
	16353540	Pin	1.5 x 8

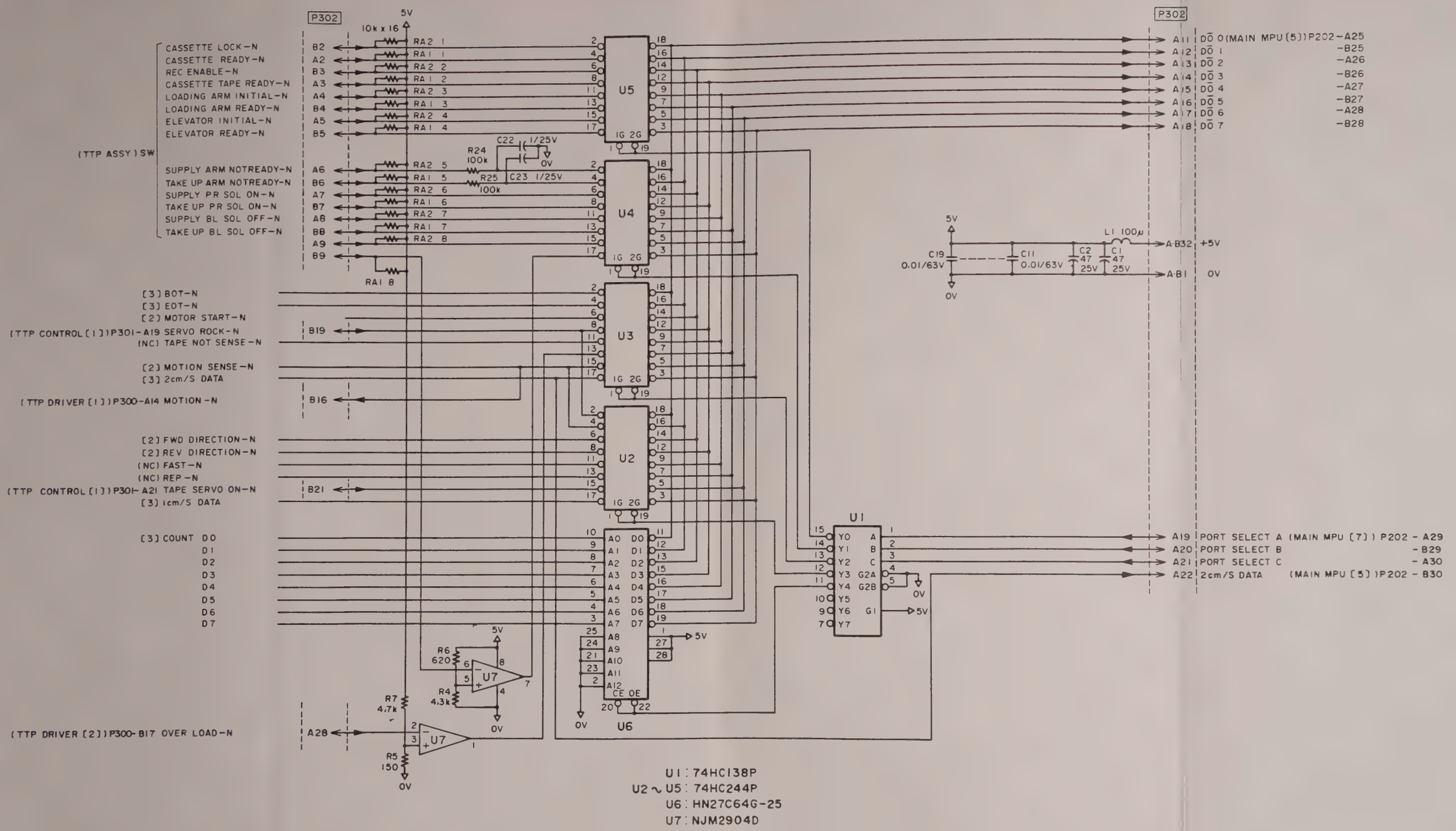

U1 : 74HC138P
U2 ~ U5 : 74HC244P
U6 : HN27C64G-25
U7 : NJM2904D

NOTE: UNLESS OTHERWISE SPECIFIED ALL RESISTORS ARE IN OHMS 1/4W, 5% AND ALL CAPACITORS ARE IN MICROFARADS.

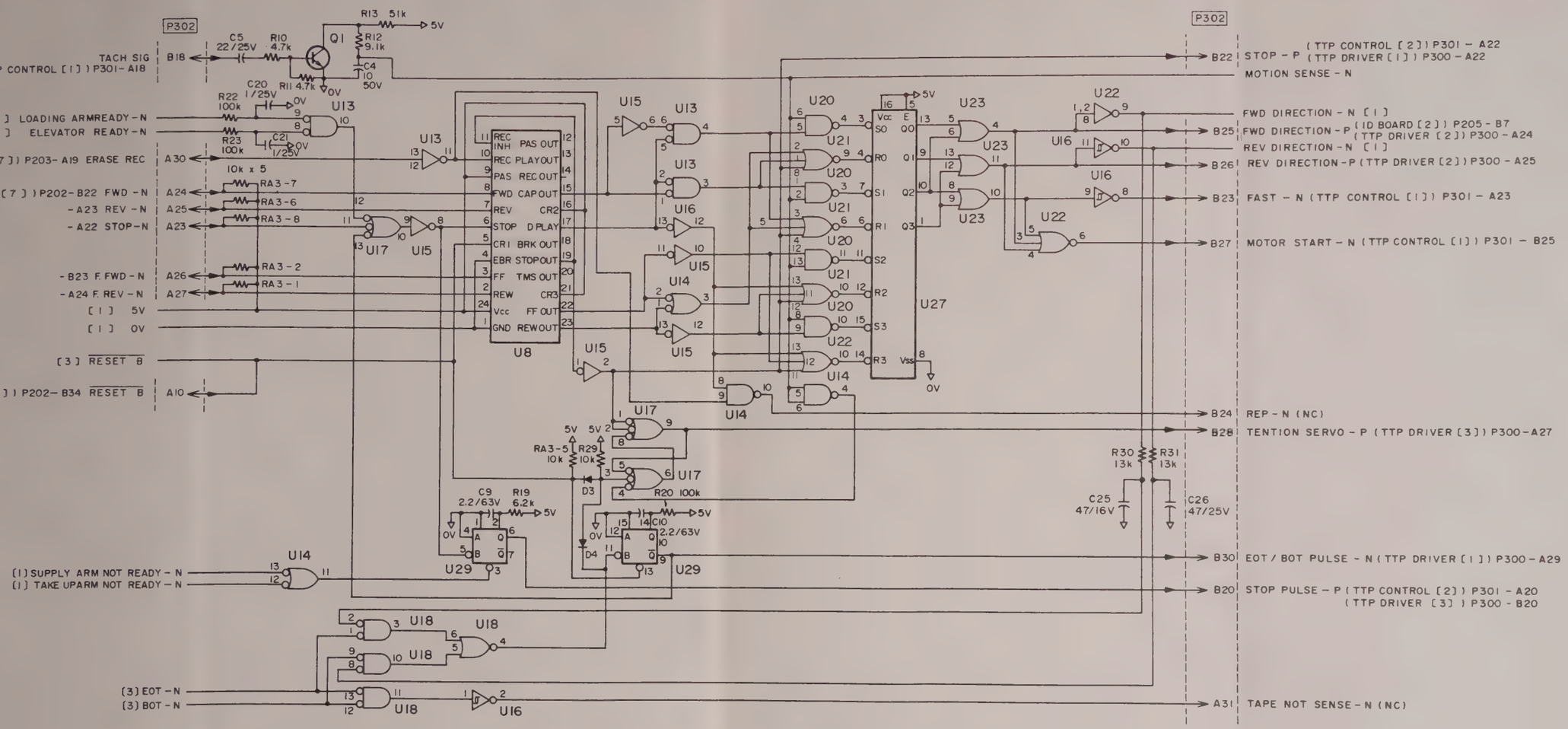

U8	: AN6251	U17	: 14023BCP	Q1	: 2SC2021LN-R
U9,U10,U32		U19	: 14013BCP	Q2	: 2SD1227MR
U30,U31	: 14520BCP	U21,U22	: 14025BCP	D1,D2	: DAP201
U11	: 74HC273P	U23	: 14071BCP	D3,D4	: 1S953
U12,U29	: 14538BCP	U24,U25	: 14073BCP		
U13,U18	: 14001BCP	U27	: 14044BCP		
U14,U20,U26	: 14011BCP	U28	: 14536BCP		
U15	: 14069BCP				
U16	: 14584BCP				

NOTE: UNLESS OTHERWISE SPECIFIED ALL RESISTORS ARE IN OHMS 1/4W, 5% AND ALL CAPACITORS ARE IN MICROFARADS.

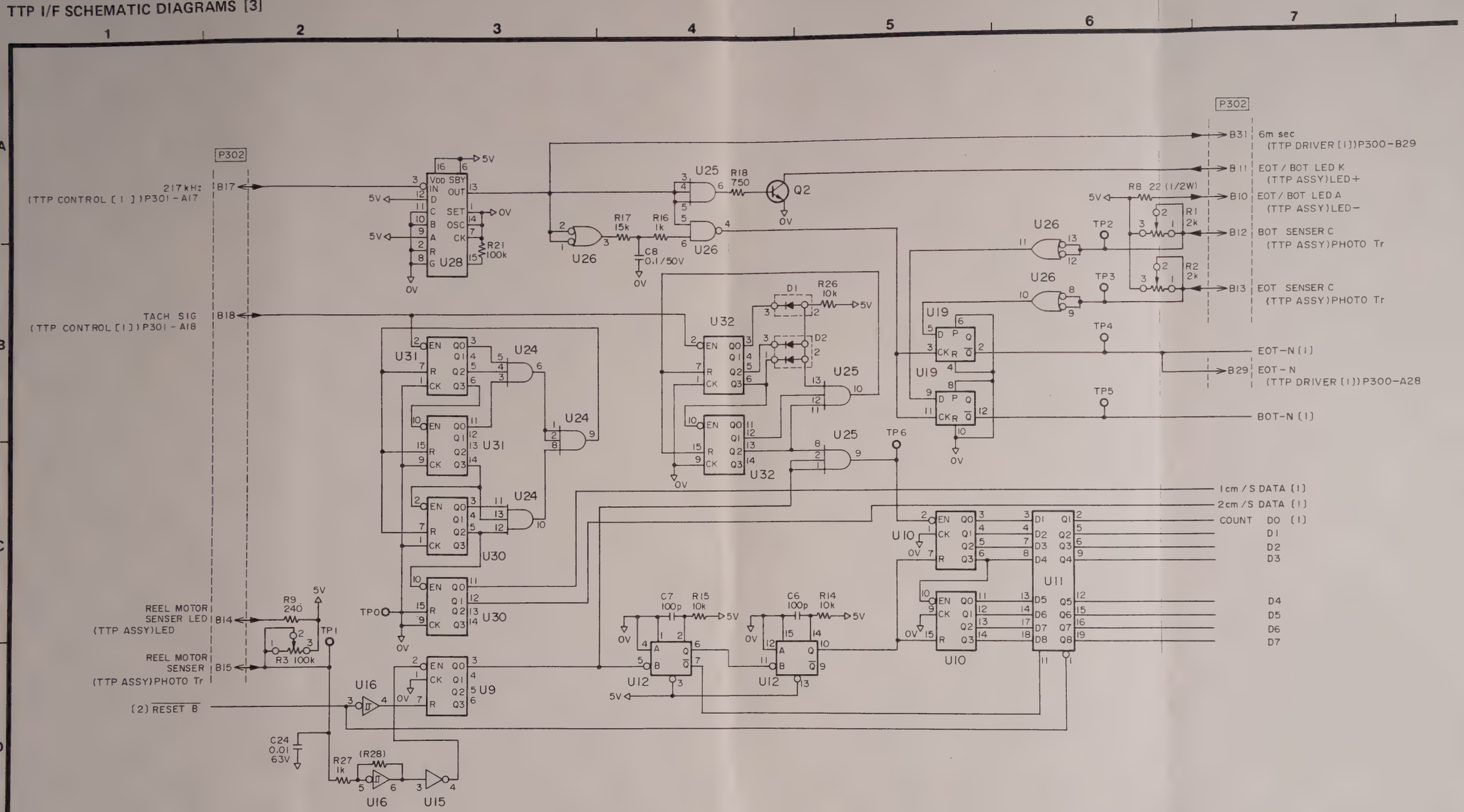

NOTE: UNLESS OTHERWISE SPECIFIED ALL RESISTORS ARE IN OHMS 1/4W, 5% AND ALL CAPACITORS ARE IN MICROFARADS.

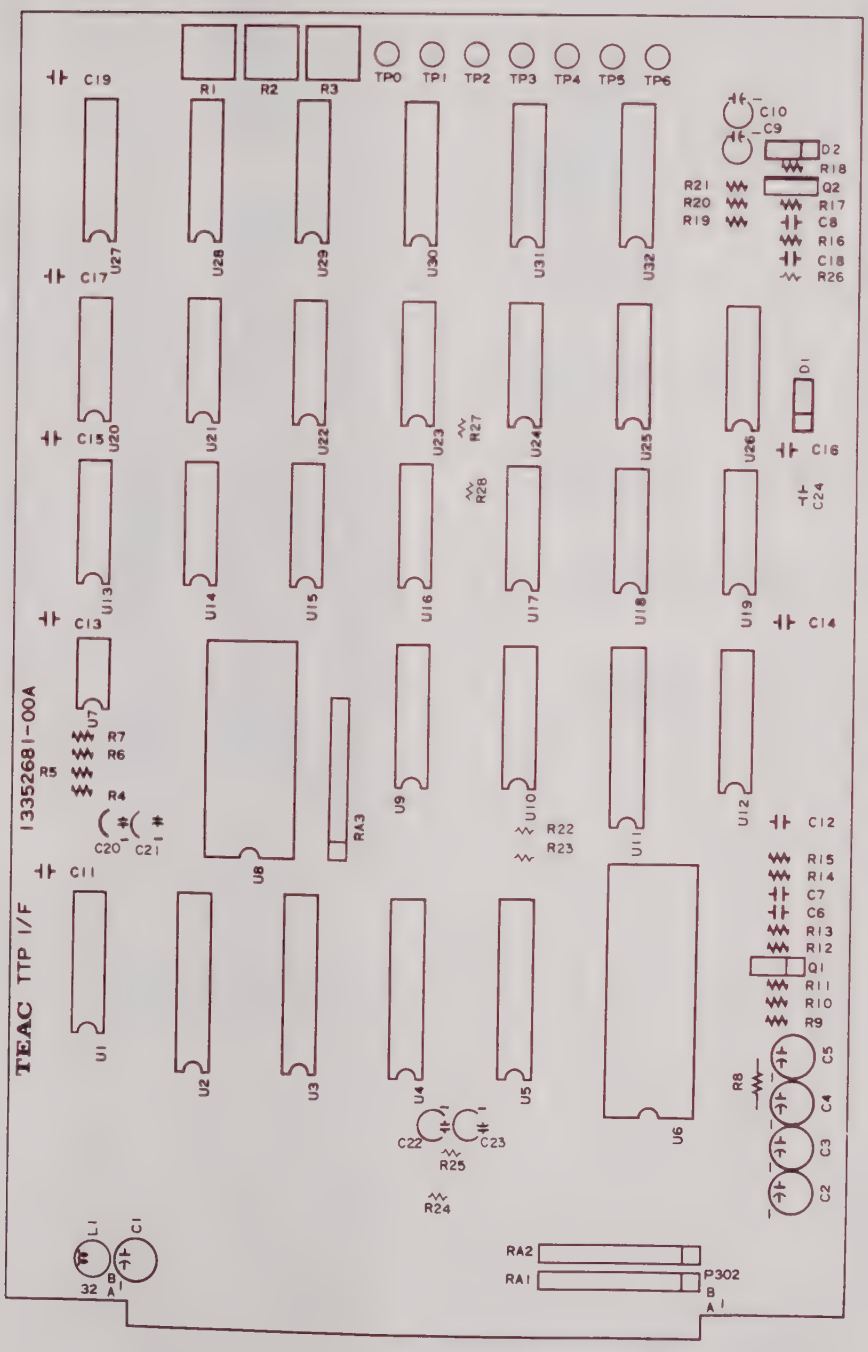
TEAC TTP I/F
13352681-00A
R1
R2
R3
TP0
TP1
TP2
TP3
TP4
TP5
TP6
C19
C17
C15
C13
C11
C10
C9
D2
R18
Q2
R17
C8
R16
C18
R26
R21
R20
R19
D1
C16
C24
C14
C12
R15
R14
C7
C6
R13
R12
Q1
R11
R10
R9
C5
C4
C3
C2
R8
C20
C21
C22
C23
R25
R24
R22
R23
R27
R28
R7
R6
R5
R4
RA3
RA2
RA1
P302
L1
C1
U1
U2
U3
U4
U5
U6
U7
U8
U9
U10
U11
U12
U13
U14
U15
U16
U17
U18
U19
U20
U21
U22
U23
U24
U25
U26
U27
U28
U29
U30
U31
U32

Ref. No.	Part No.	Description	
	1555268100	TTP I/F PCBA	
– ICs –			
U1	*13442661	IC	TC74HC138P
U2-U5	*13442688	IC	TC74HC244P
U6	1370009400	Memory, IC	ROM NXR TTP
U7	*13447343	IC	NJM2904D
U8	*13441582	IC	AN6251
U9	*13441386	IC	MC14520BCP
U10	*13441386	IC	MC14520BCP
U11	*13442695	IC	MC74HC273N
U12	*13441598	IC	MC14538BCP
U13	*13441378	IC	MC14001BCP
U14	*13441379	IC	MC14011BCP
U15	*13441401	IC	MC14069BCP
U16	*13441580	IC	MC14584BCP
U17	*13441381	IC	MC14023BCP
U18	*13441378	IC	MC14001BCP
U19	*13441392	IC	MC14013BCP
U20	*13441379	IC	MC14011BCP
U21	*13441421	IC	MC14025BCP
U22	*13441421	IC	MC14025BCP
U23	*13441405	IC	MC14071BCP
U24	*13441407	IC	MC14073BCP
U25	*13441407	IC	MC14073BCP
U26	*13441379	IC	MC14011BCP
U27	*13441398	IC	MC14044BCP
U28	*13441361	IC	MC14536BCP
U29	*13441598	IC	MC14538BCP
U30	*13441386	IC	MC14520BCP
U31	*13441386	IC	MC14520BCP
U32	*13441386	IC	MC14520BCP
– Transistors –			
Q1	*13424296	Transistor	2SC2021LN-R
Q2	*13427150	Transistor	2SD1227MR
– Diodes –			
D1	*13411442	Diode	DAP201
D2	*13411442	Diode	DAP201
D3	*13413020	Diode	1S953
D4	*13413020	Diode	1S953

Ref. No.	Part No.	Description		
– Capasitors –				
C1	12903071	Electrolytic	47μF	25V
C2	12903071	Electrolytic	47μF	25V
C4	12903070	Electrolytic	22μF	25V
C5	12903074	Electrolytic	10μF	50V
C6	12900453	Ceramic	100pF	100V
C7	12900453	Ceramic	100pF	100V
C8	12414104	Ceramic	0.1μF	50V
C9	12901922	Electrolytic	2.2μF	63V
C10	12901922	Electrolytic	2.2μF	63V
C11-C19	12901325	Ceramic	0.01μF	63V
C20-C23	12901382	Tantalum	1μF	25V
C24	12901325	Ceramic	0.01μF	63V
C25, C26	12902015	Electrolytic	47μF	16V
– Resistors –				
R1	*13256663	Variable	2KΩ	
R2	*13256663	Variable	2KΩ	
R3	*13256668	Variable	100KΩ	
R4	11173432	Carbon	4.3KΩ	¼W
R5	11173151	Carbon	150Ω	¼W
R6	11173621	Carbon	620Ω	¼W
R7	11173472	Carbon	4.7KΩ	¼W
R8	11195220	Carbon	22Ω	½W
R9	11173241	Carbon	240Ω	¼W
R10	11173472	Carbon	4.7KΩ	¼W
R11	11173472	Carbon	4.7KΩ	¼W
R12	11173912	Carbon	9.1KΩ	¼W
R13	11173513	Carbon	51KΩ	¼W
R14	11173103	Carbon	10KΩ	¼W
R15	11173103	Carbon	10KΩ	¼W
R16	11173102	Carbon	1KΩ	¼W
R17	11173153	Carbon	15KΩ	¼W
R18	11173751	Carbon	750Ω	¼W
R19	11173622	Carbon	6.2KΩ	¼W
R20-R25	11173104	Carbon	100KΩ	¼W
R26	11173103	Carbon	10KΩ	¼W
R27	11173102	Carbon	1KΩ	¼W
R29	11173103	Carbon	10KΩ	¼W
R30, R31	11172133	Carbon	13KΩ	¼W
RA1	*13492660	Resistor Array	10KΩx8	
RA2	*13492660	Resistor Array	10KΩx8	
RA3	*13492660	Resistor Array	10KΩx8	
– Miscellaneous –				
TP0-TP6	13189150	Test Point		
L1	14723477	Coil, Choke	100μH	
	1627118471	Plate, Name		
	*13299479	Socket, IC 28P (U6)		
	1678789500	Card Puller		
	16353540	Pin	1.5 x 8	

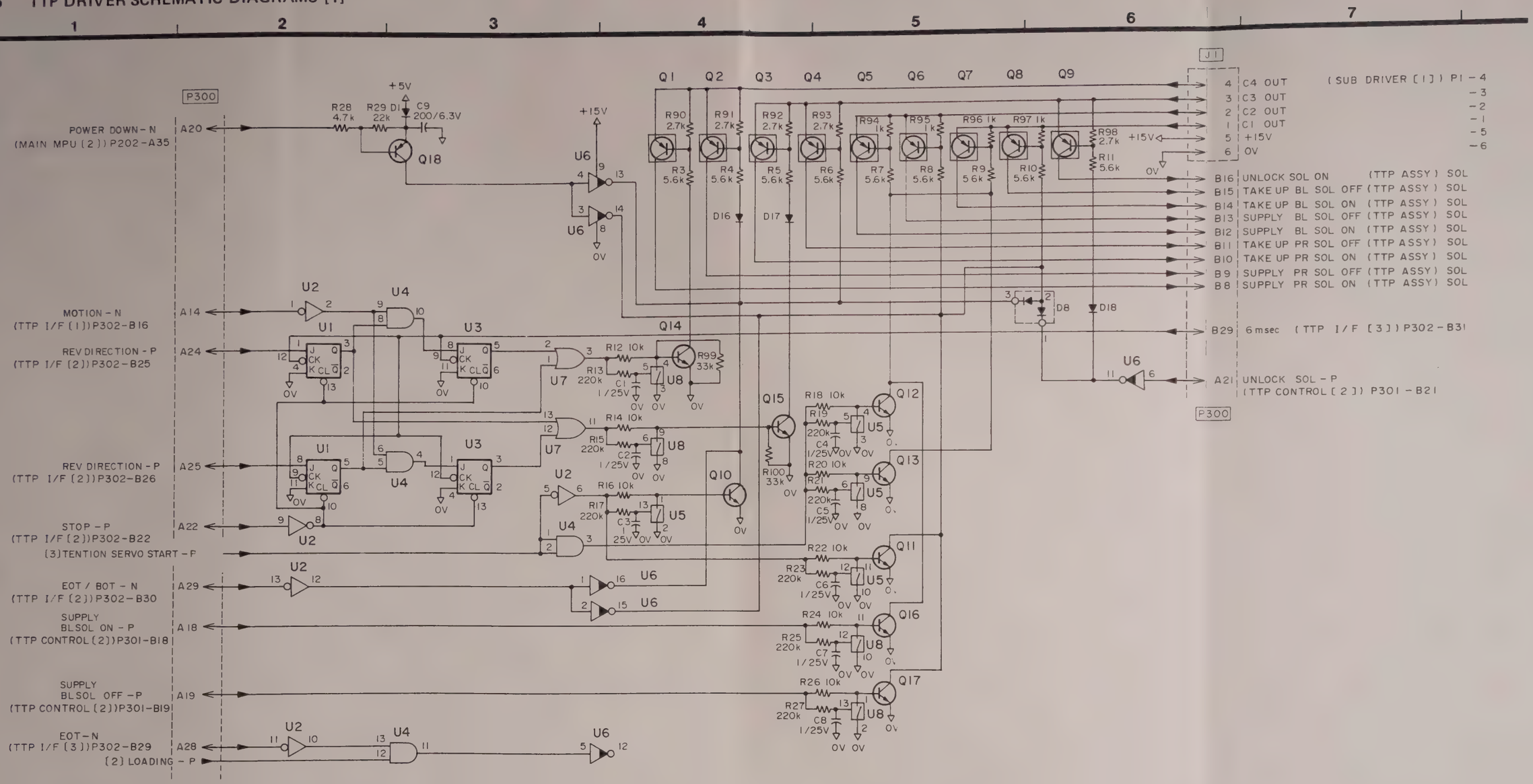

U1, 3	: 74HC107P	Q1 ~ 9, 31, 32	: 2SB1020	D1, D15 ~ 18	: 1S953
U2	: 14069 BCP	33, 35, 36		D2, 3	: HZ2CLL
U4	: 14081 BCP	Q10 ~ 17, 34	: 2SC2021 LN-R	D4, 5	: DA203
U5, 8	: 14066 BCP	Q18, 29, 30	: 2SA937 LN-R	D6, 7, 9, 10, 11, 12	: U19C
U6, 13	: μPA2003C	Q19, 20, 23, 24	: 2SD571	D8	: DAP201
U7	: 14071 BCP	Q21, 22, 25, 26	: 2SB605	D13, 14	: HZ3B1
U9, 10	: NJM2904D	Q27, 28	: 2SD1415		
U11, 12	: TL494C				
U14	: LM317T				

NOTE: UNLESS OTHERWISE SPECIFIED ALL RESISTORS ARE IN OHMS 1/4W, 5% AND ALL CAPACITORS ARE IN MICROFARADS.

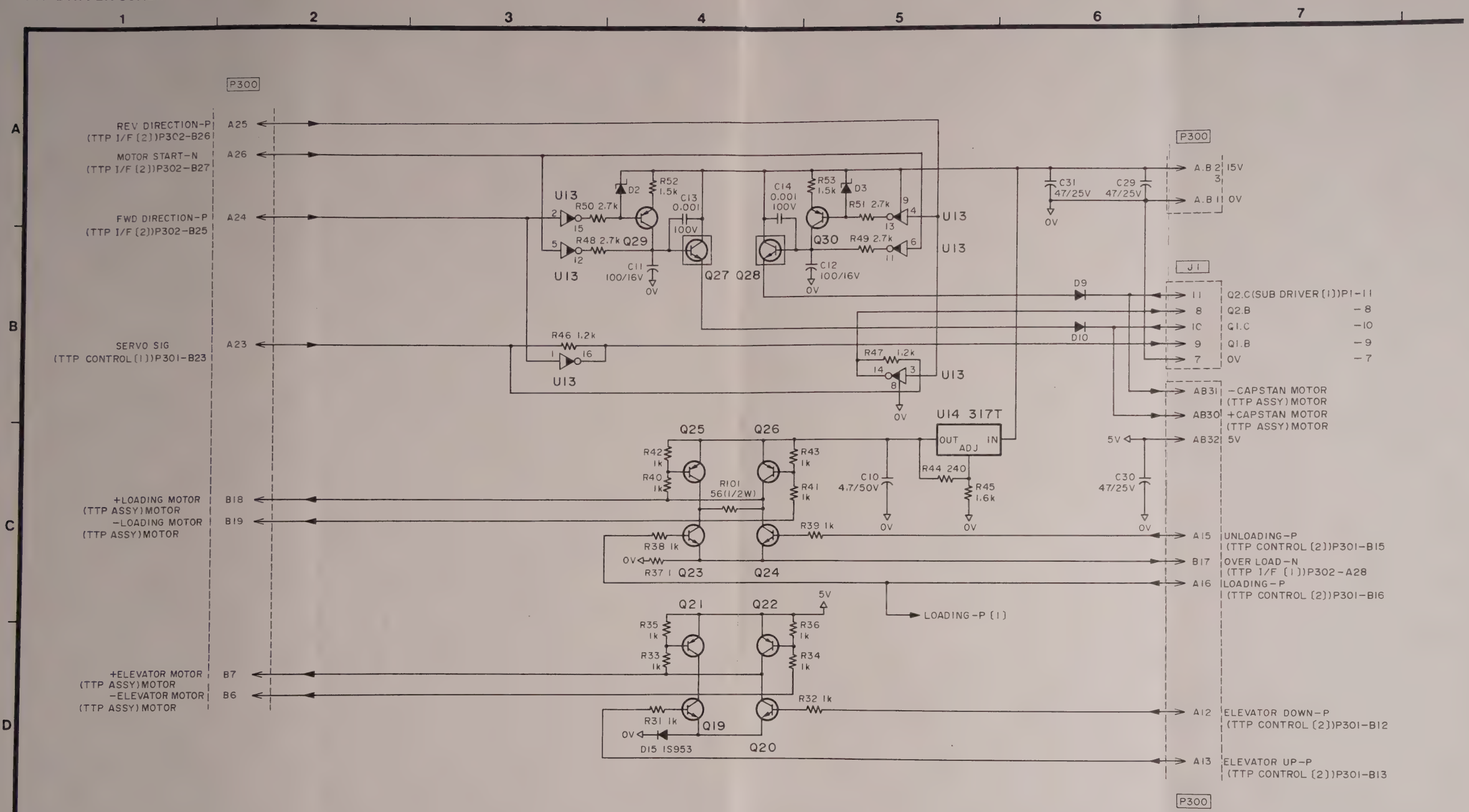

NOTE: UNLESS OTHERWISE SPECIFIED ALL RESISTORS ARE IN OHMS 1/4W, 5% AND ALL CAPACITORS ARE IN MICROFARADS.

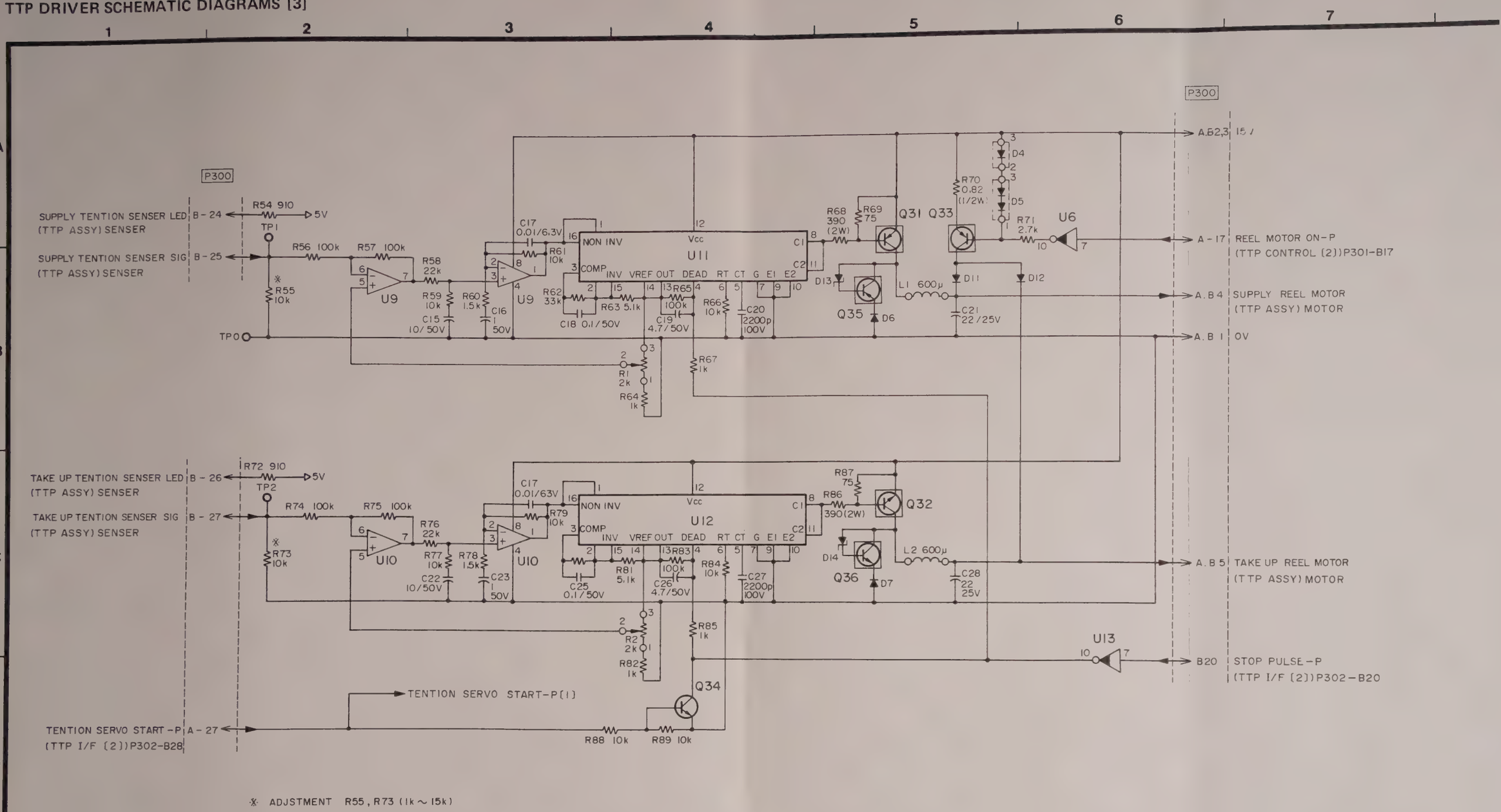

※ ADJSTMENT R55, R73 (1k ~ 15k)

NOTE: UNLESS OTHERWISE SPECIFIED ALL RESISTORS ARE IN OHMS 1/4W, 5% AND ALL CAPACITORS ARE IN MICROFARADS.

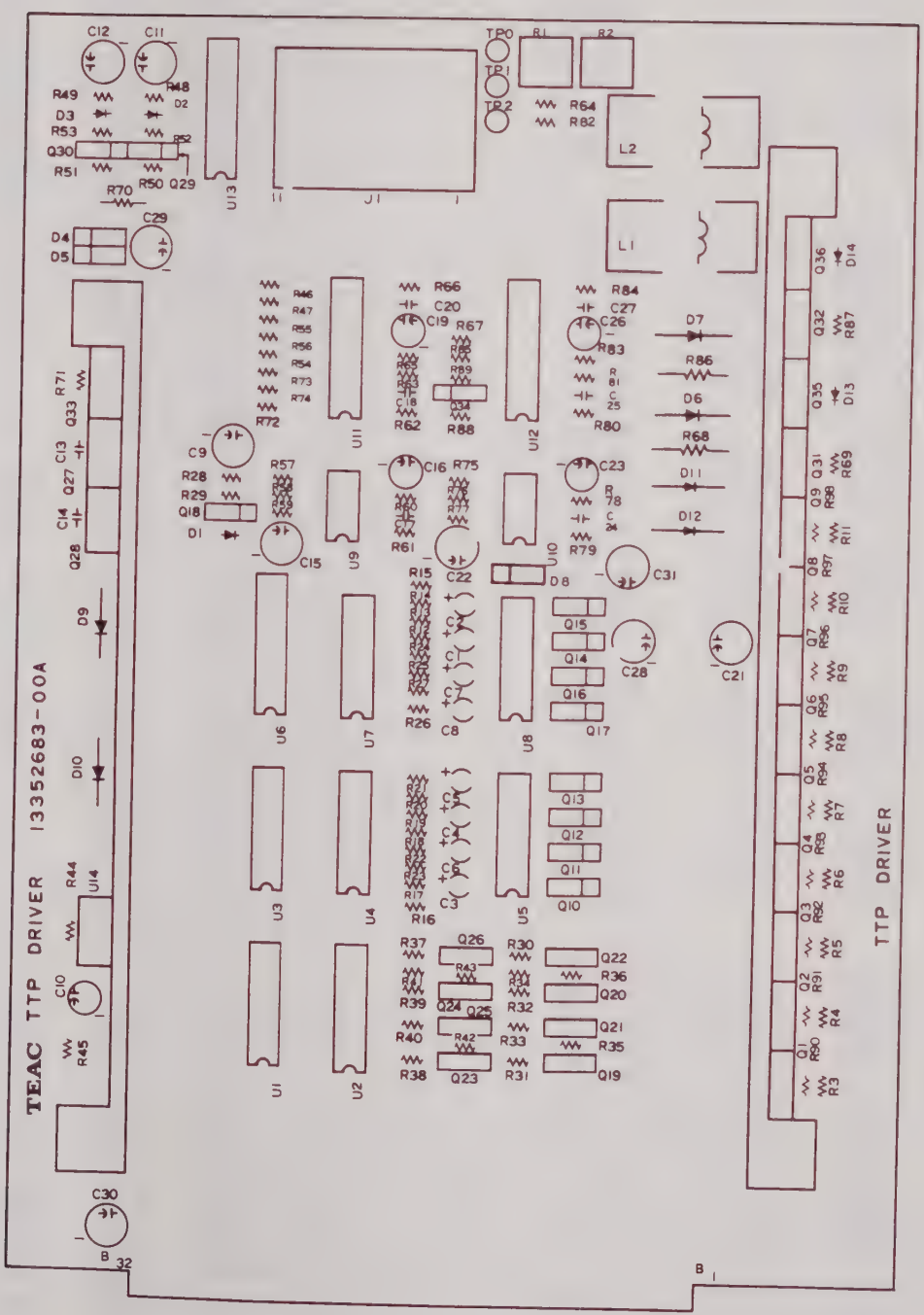
TEAC TTP DRIVER 13352683-00A
TTP DRIVER
C12
C11
R49
D3
R53
Q30
R51
R48
D2
R52
R50
Q29
R70
C29
D4
D5
U13
J1
TP0
TP1
TP2
R1
R2
R64
R82
L2
L1
R46
R47
R55
R56
R54
R73
R74
R72
U11
R66
C20
C19
R67
R89
R88
U12
R84
C27
C26
R83
R81
C25
R80
D7
R86
D6
R68
D11
D12
C9
R28
R29
Q18
D1
R57
C15
U9
C16
R75
R61
C22
U10
D8
C23
R78
C24
R79
C31
R15
C8
U6
U7
U8
Q15
Q14
Q16
Q17
C28
C21
D9
D10
R44
U14
C10
R45
U3
U4
U5
Q13
Q12
Q11
Q10
R16
C3
U1
U2
R37
Q26
R43
R39
Q24
Q25
R40
R42
R38
Q23
R30
R31
R32
R33
R31
Q22
R36
Q20
Q21
R35
Q19
C30
B 32
B 1
Q36
D14
Q32
R87
Q35
D13
Q31
R69
Q9
R99
R11
Q8
R97
R10
Q7
R96
R9
Q6
R95
R8
Q5
R94
R7
Q4
R93
R6
Q3
R92
R5
Q2
R91
R4
Q1
R90
R3

PARTS LIST – TTP DRIVER –

Ref. No.	Part No.	Description	
	1555268300	TTP Driver PCBA	
– ICs –			
U1	*13442652	IC	TC74HC107P
U2	*13441401	IC	MC14069BCP
U3	*13442652	IC	TC74HC107P
U4	*13441411	IC	MC14081BCP
U5	*13441733	IC	HD14066BCP
U6	*13428107	IC	μPA2003C
U7	*13441405	IC	MC14071BCP
U8	*13441733	IC	HD14066BCP
U9	*13447343	IC	NJM2904D
U10	*13447343	IC	NJM2904D
U11	*13447241	IC	TL494C
U12	*13447241	IC	TL494C
U13	*13428107	IC	μPA2003C
U14	*13447530	IC	LM317T
– Transistors –			
Q1-Q9	*13423172	Transistor	2SB1020
Q10-Q17	*13424296	Transistor	2SC2021LN-R
Q18	*13421207	Transistor	2SA937LN-R
Q19	*13427086	Transistor	2SD571
Q20	*13427086	Transistor	2SD571
Q21	*13423091	Transistor	2SB605
Q22	*13423091	Transistor	2SB605
Q23	*13427086	Transistor	2SD571
Q24	*13427086	Transistor	2SD571
Q25	*13423091	Transistor	2SB605
Q26	*13423091	Transistor	2SB605
Q27	*13427173	Transistor	2SD1415
Q28	*13427173	Transistor	2SD1415
Q29	*13421207	Transistor	2SA937LN-R
Q30	*13421207	Transistor	2SA937LN-R
Q31	*13423172	Transistor	2SB1020
Q32	*13423172	Transistor	2SB1020
Q33	*13423172	Transistor	2SB1020
Q34	*13424296	Transistor	2SC2021LN-R
Q35	*13423172	Transistor	2SB1020
Q36	*13423172	Transistor	2SB1020
– Diodes –			
D1	*13413020	Diode	1S953
D2	*13415387	Zener Diode	HZ2CLL
D3	*13415387	Zener Diode	HZ2CLL
D4	*13411405	Diode	DA203
D5	*13411405	Diode	DA203
D6	*13411306	Diode	U19C
D7	*13411306	Diode	U19C
D8	*13411442	Diode	DAP201
D9-D12	*13411306	Diode	U19C
D13	*13415153	Zener Diode	HZ3B1
D14	*13415153	Zener Diode	HZ3B1
D15-D18	*13413020	Diode	1S953
– Capacitors –			
C1-C8	12902382	Tantalum 1μF	25V
C9	12903061	Electrolytic 220μF	6.3V
C10	12903073	Electrolytic 4.7μF	50V
C11	12903068	Electrolytic 100μF	16V
C12	12903068	Electrolytic 100μF	16V
C13	12901295	Ceramic 1000pF	100V
C14	12901295	Ceramic 1000pF	100V
C15	12901916	Electrolytic 10μF	50V
C16	12901912	Electrolytic 1μF	50V
C17	12901325	Ceramic 0.01μF	63V
C18	12414104	Ceramic 0.1μF	50V
C19	12903073	Electrolytic 4.7μF	50V
C20	12901317	Ceramic 2200pF	100V
C21	12903070	Electrolytic 22μF	25V
C22	12901916	Electrolytic 10μF	50V
C23	12901912	Electrolytic 1μF	50V
C24	12901325	Ceramic 0.01μF	63V
C25	12414104	Ceramic 0.1μF	50V
C26	12903073	Electrolytic 4.7μF	50V
C27	12901317	Ceramic 2200pF	100V

Ref. No.	Part No.	Description		
C28	12903070	Electrolytic	22μF	25V
C29	12903071	Electrolytic	47μF	25V
C30	12903071	Electrolytic	47μF	25V
C31	12903071	Electrolytic	47μF	25V
– Resistors –				
R1	*13256663	Variable	2KΩ	
R2	*13256663	Variable	2KΩ	
R3-R11	11173562	Carbon	5.6KΩ	¼W
R12	11173103	Carbon	10KΩ	¼W
R13	*11173224	Carbon	220KΩ	¼W
R14	11173103	Carbon	10KΩ	¼W
R15	11173224	Carbon	220KΩ	¼W
R16	11173103	Carbon	10KΩ	¼W
R17	11173224	Carbon	220KΩ	¼W
R18	11173103	Carbon	10KΩ	¼W
R19	11173224	Carbon	220KΩ	¼W
R20	11173103	Carbon	10KΩ	¼W
R21	11173224	Carbon	220KΩ	¼W
R22	11173103	Carbon	10KΩ	¼W
R23	11173224	Carbon	220KΩ	¼W
R24	11173103	Carbon	10KΩ	¼W
R25	11173224	Carbon	220KΩ	¼W
R26	11173103	Carbon	10KΩ	¼W
R27	11173224	Carbon	220KΩ	¼W
R28	11173472	Carbon	4.7KΩ	¼W
R29	11173223	Carbon	22KΩ	¼W
R31-R36	11173102	Carbon	1KΩ	¼W
R37	11173109	Carbon	1Ω	¼W
R38-R43	11173102	Carbon	1KΩ	¼W
R44	11173241	Carbon	240Ω	¼W
R45	11173162	Carbon	1.6KΩ	¼W
R46	11173122	Carbon	1.2KΩ	¼W
R47	11173122	Carbon	1.2KΩ	¼W
R48-R51	11173272	Carbon	2.7KΩ	¼W
R52	11173152	Carbon	1.5KΩ	¼W
R53	11173152	Carbon	1.5KΩ	¼W
R54	11173911	Carbon	910Ω	¼W
R55	11173103	Carbon	10KΩ	¼W
R56	11173104	Carbon	100KΩ	¼W
R57	11173104	Carbon	100KΩ	¼W
R58	11173223	Carbon	22KΩ	¼W
R59	11173103	Carbon	10KΩ	¼W
R60	11173152	Carbon	1.5KΩ	¼W
R61	11173103	Carbon	10KΩ	¼W
R62	11173333	Carbon	33KΩ	¼W
R63	11173512	Carbon	5.1KΩ	¼W
R64	11173102	Carbon	1KΩ	¼W
R65	11173104	Carbon	100KΩ	¼W
R66	11173103	Carbon	10KΩ	¼W
R67	11173102	Carbon	1KΩ	¼W
R68	11059391	Metal Film	390Ω	2W
R69	11173750	Carbon	75Ω	¼W
R70	11058828	Carbon	0.82Ω	½W
R71	11173272	Carbon	2.7KΩ	¼W
R72	11173911	Carbon	910Ω	¼W
R73	11173103	Carbon	10KΩ	¼W
R74	11173104	Carbon	100KΩ	¼W
R75	11173104	Carbon	100KΩ	¼W
R76	11173223	Carbon	22KΩ	¼W
R77	11173103	Carbon	10KΩ	¼W
R78	11173152	Carbon	1.5KΩ	¼W
R79	11173103	Carbon	10KΩ	¼W
R80	11173333	Carbon	33KΩ	¼W
R81	11173512	Carbon	5.1KΩ	¼W
R82	11173102	Carbon	1KΩ	¼W
R83	11173104	Carbon	100KΩ	¼W
R84	11173103	Carbon	10KΩ	¼W
R85	11173102	Carbon	1KΩ	¼W
R86	11059391	Metal Film	390Ω	2W
R87	11173750	Carbon	75Ω	¼W
R88	11173103	Carbon	10KΩ	¼W
R89	11173103	Carbon	10KΩ	¼W
R90	11173272	Carbon	2.7KΩ	¼W
R91	11173272	Carbon	2.7KΩ	¼W
R92	11173272	Carbon	2.7KΩ	¼W

Ref. No.	Part No.	Description		
R93	11173272	Carbon	2.7KΩ	¼W
R94	11173102	Carbon	1KΩ	¼W
R95	11173102	Carbon	1KΩ	¼W
R96	11173102	Carbon	1KΩ	¼W
R97	11173102	Carbon	1KΩ	¼W
R98	11173272	Carbon	2.7KΩ	¼W
R99	11173333	Carbon	33KΩ	¼W
R100	11173333	Carbon	33KΩ	¼W
R101	11176560	Carbon	56Ω	½W
– Miscellaneous –				
TP0	13189150	Test Point		
TP1	13189150	Test Point		
TP2	13189150	Test Point		
J1	13150609	Connector 11P		
L1	*14723902	Coil	600mH	
L2	*14723902	Coil	600mH	
	13123334	Connector 64P		
	1678789500	Card Puller		
	16353540	Pin	1.5 x 8	
	16362140	Plate, Insulator		
	16496458	Washer, Insulator		

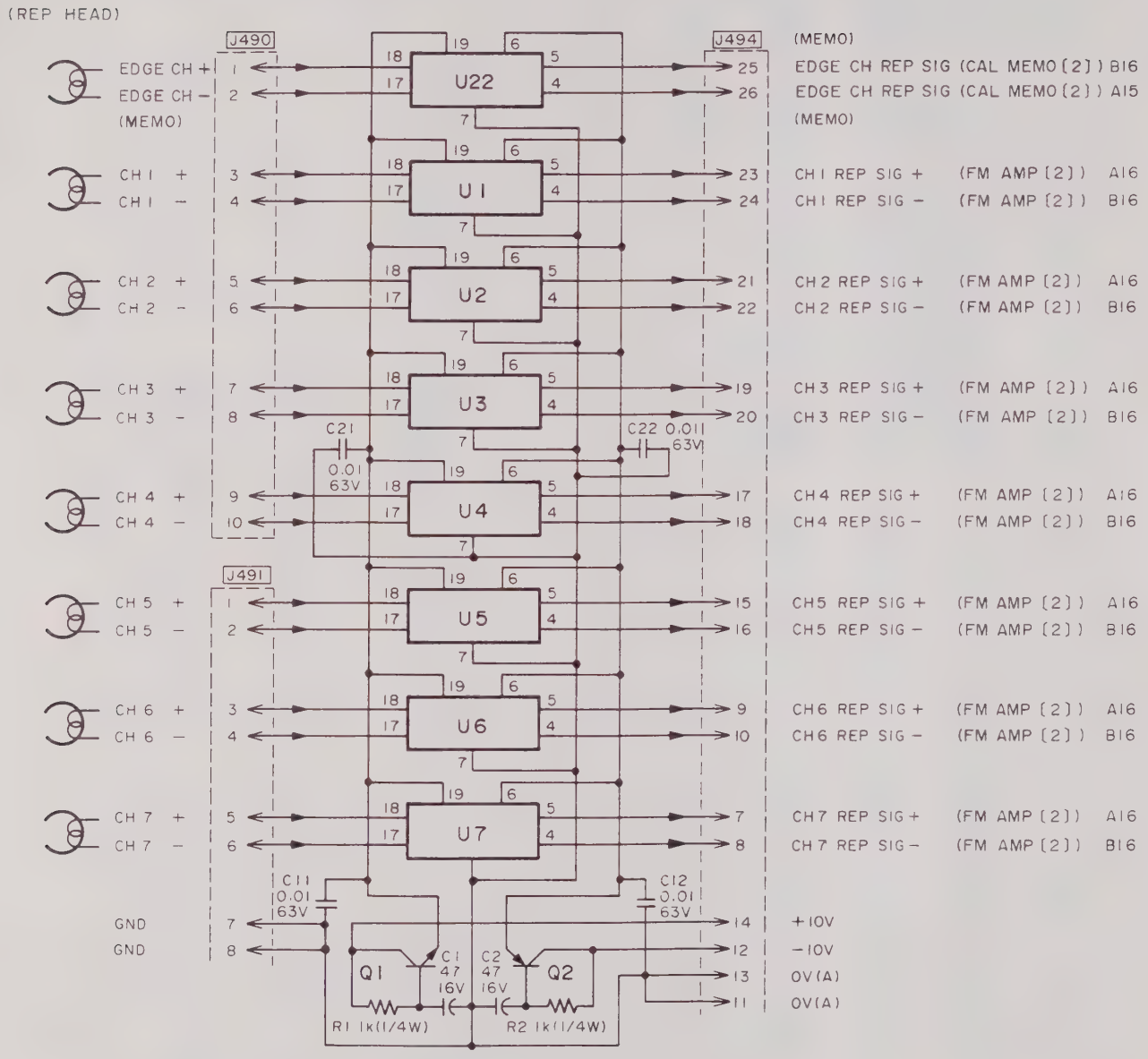

Q1 : 2SC945K
Q2 : 2SA733K
U1 ∿ U7, U22 : PRE AMP (TEAC#15545021-00)

APPLICATION:
XR-5000
XR-7000

NOTE: UNLESS OTHERWISE SPECIFIED ALL RESISTORS ARE IN OHMS 1/4W, 5% AND ALL CAPACITORS ARE IN MICROFARADS.

HEAD AMP SCHEMATIC DIAGRAMS [2]

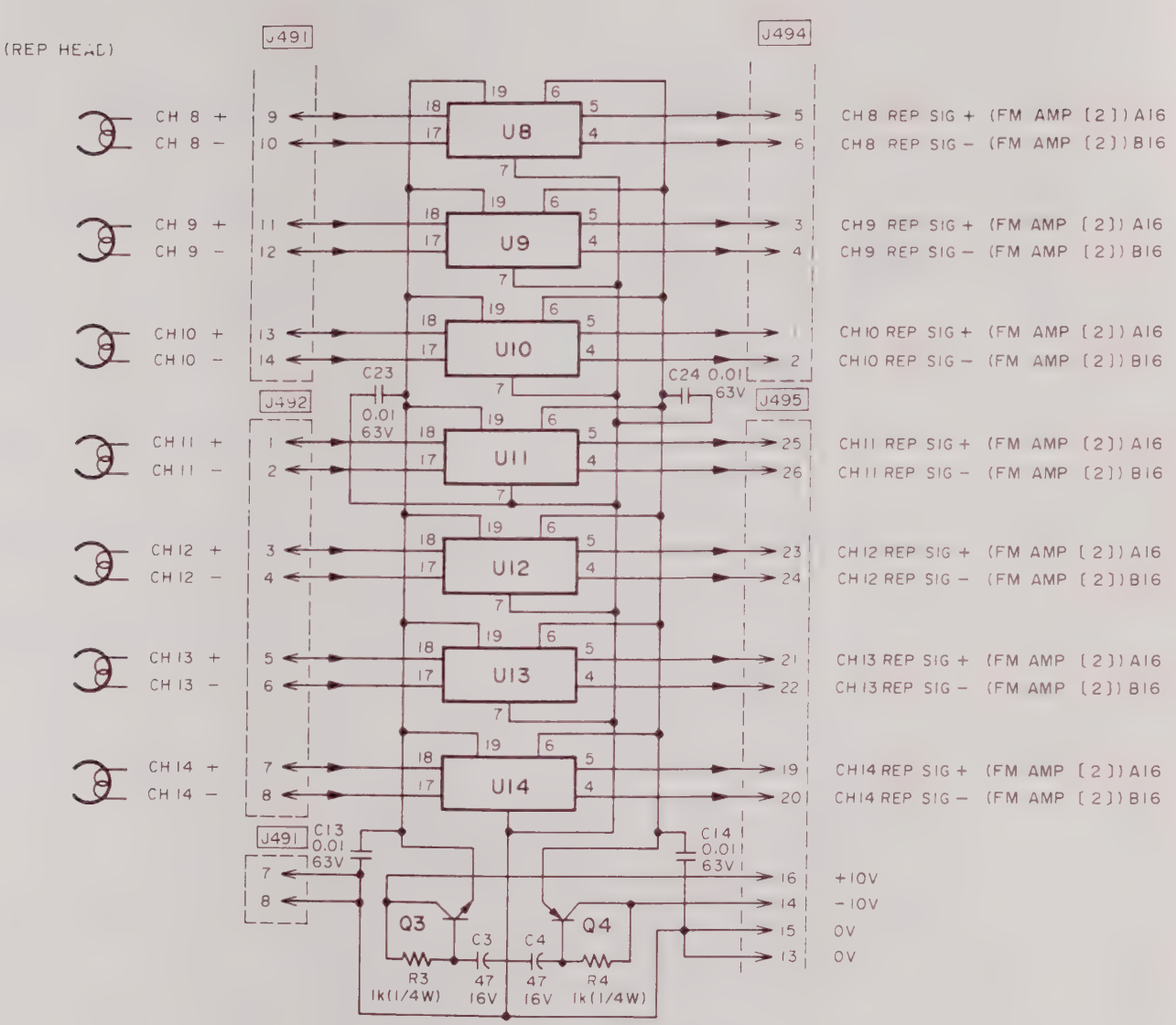

Q3 : 2SC945K
Q4 : 2SA733K
U8∿U14 : PRE AMP (TEAC#15545021−00)

APPLICATION
XR−5000
XR−7000

NOTE: UNLESS OTHERWISE SPECIFIED ALL RESISTORS ARE IN OHMS 1/4W, 5% AND ALL CAPACITORS ARE IN MICROFARADS.

HEAD AMP SCHEMATIC DIAGRAMS [3]

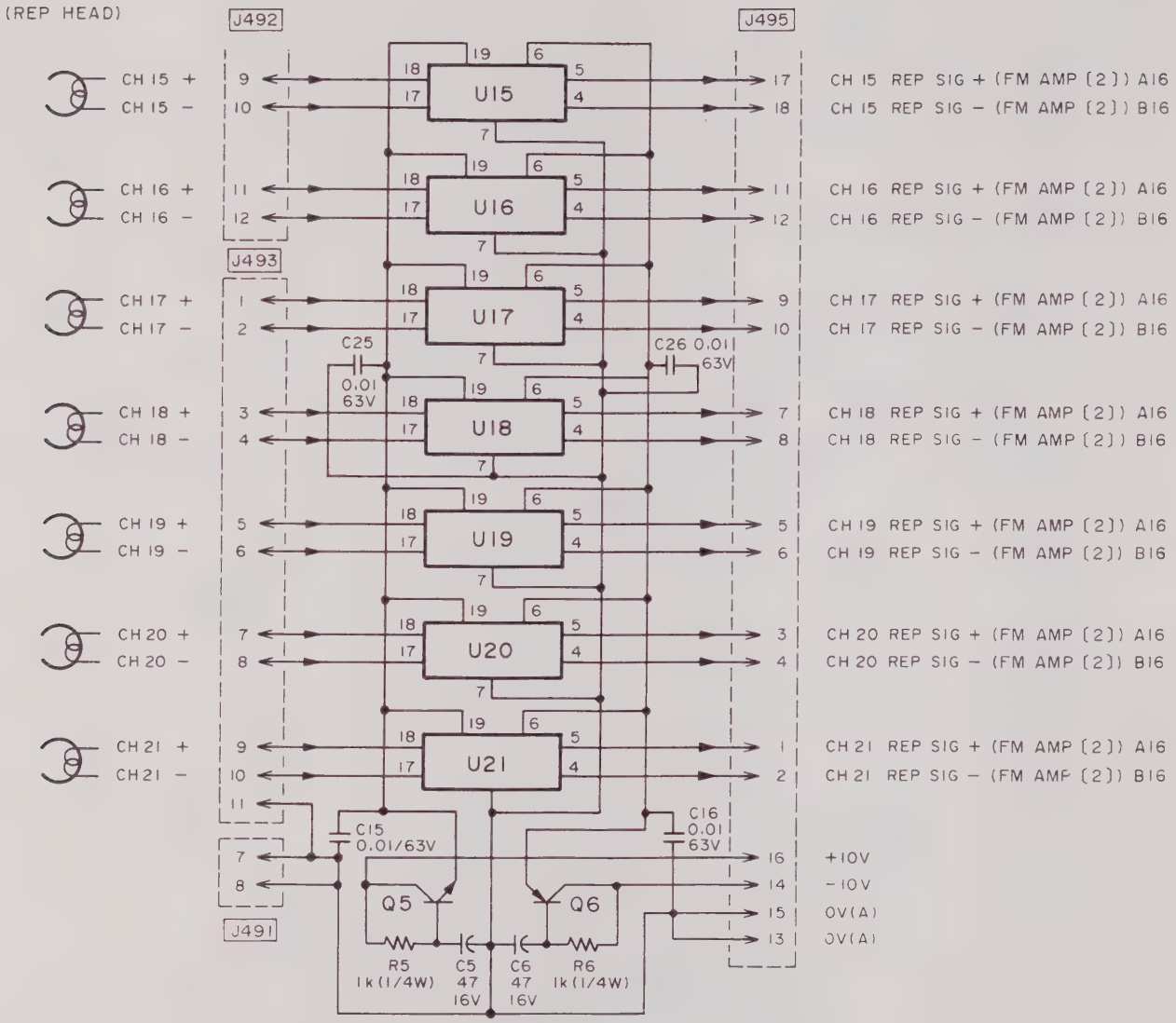

Q5 : 2SC945K
Q6 : 2SA733K
U15 ∿ U21 : PRE AMP (TEAC#15545021-00)

APPLICATION:
XR-7000

NOTE: UNLESS OTHERWISE SPECIFIED ALL RESISTORS ARE IN OHMS 1/4W, 5% AND ALL CAPACITORS ARE IN MICROFARADS.

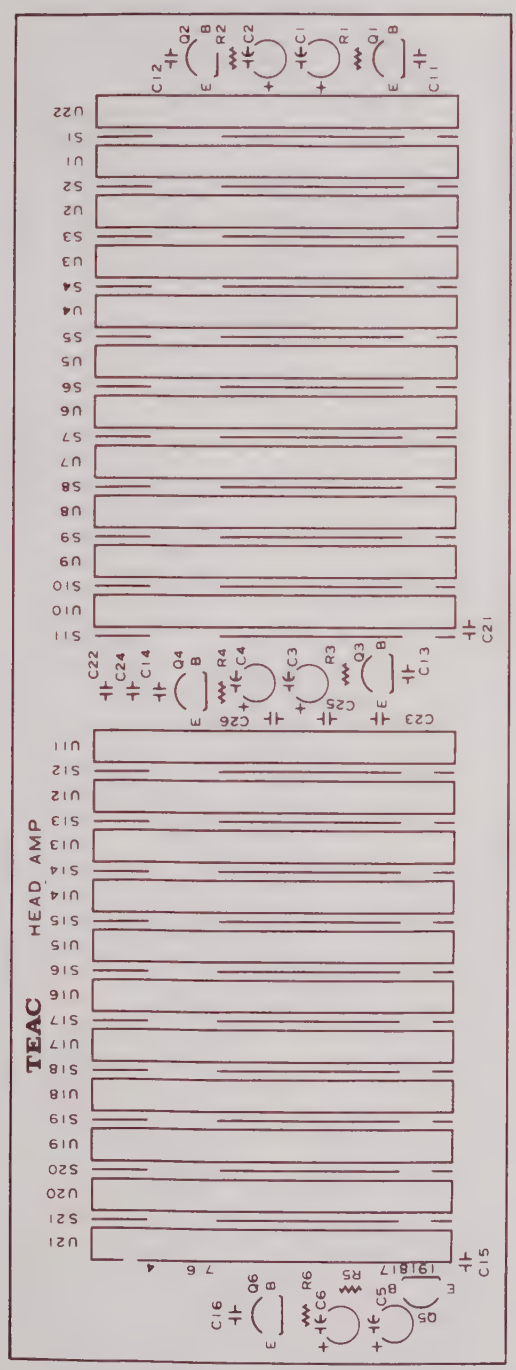
TEAC
HEAD AMP

PARTS LIST – HEAD AMP –

Ref. No.	Part No.	Description		
	1555267600	Head Amp PCBA		
– ICs –				
U1-U14	1554502100	IC	Pre Amp (NXR) PCBA	
U22	1554502100	IC	Pre Amp (NXR) PCBA	
– Transistors –				
Q1	*13424134	Transistor	2SC945K	
Q2	*13421089	Transistor	2SA733K	
Q3	*13424134	Transistor	2SC945K	
Q4	*13421089	Transistor	2SA733K	
– Capacitors –				
C1-C4	12902015	Electrolytic	47μF	16V
C11-C14	12901325	Ceramic	0.01μF	63V
C21-C26	12901325	Ceramic	0.01μF	63V
– Resistors –				
R1-R4	11066102	Metal Film	1KΩ	1/5W

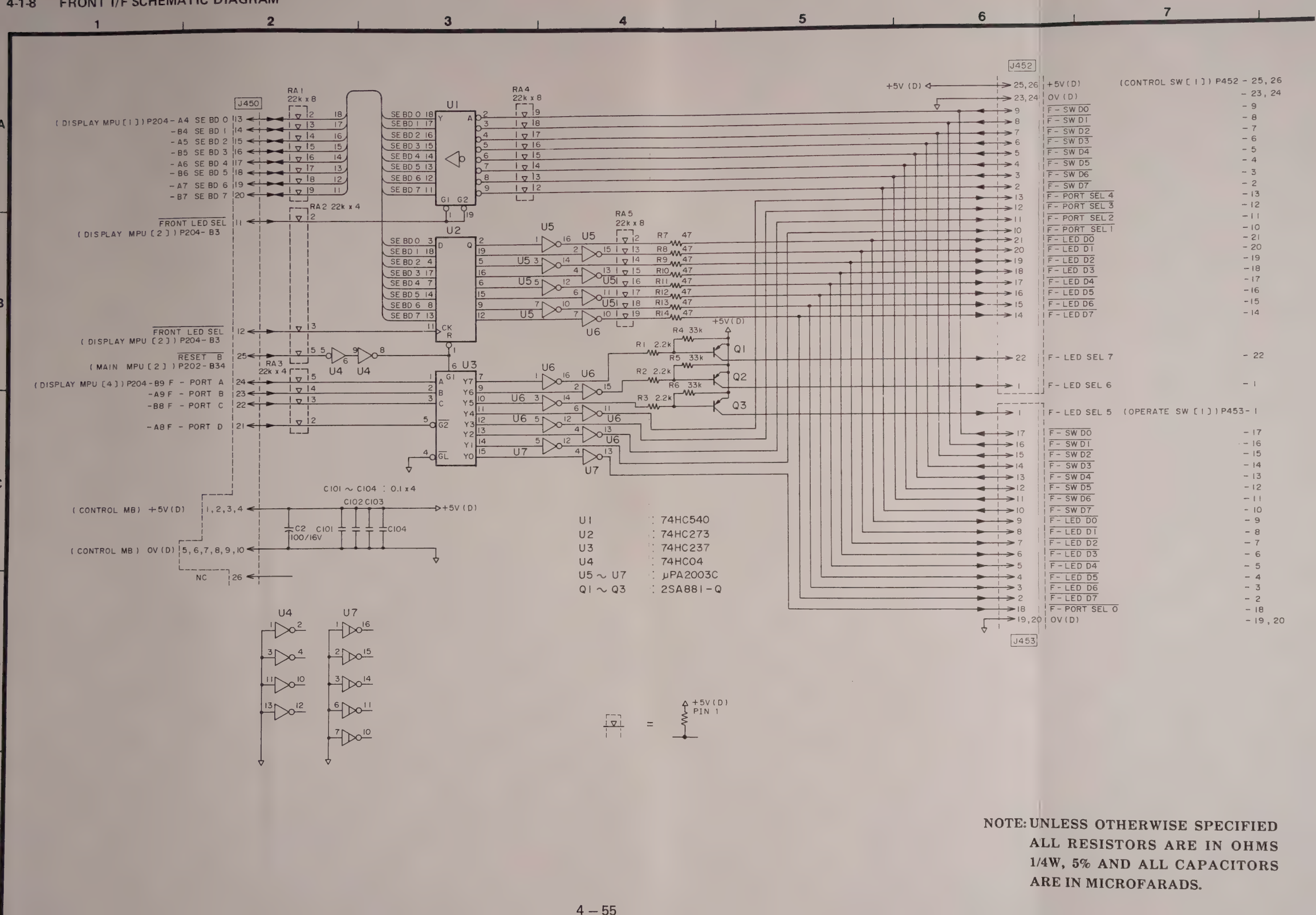

NOTE: UNLESS OTHERWISE SPECIFIED ALL RESISTORS ARE IN OHMS 1/4W, 5% AND ALL CAPACITORS ARE IN MICROFARADS.

PRINTED CIRCUIT BOARD – FRONT I/F –

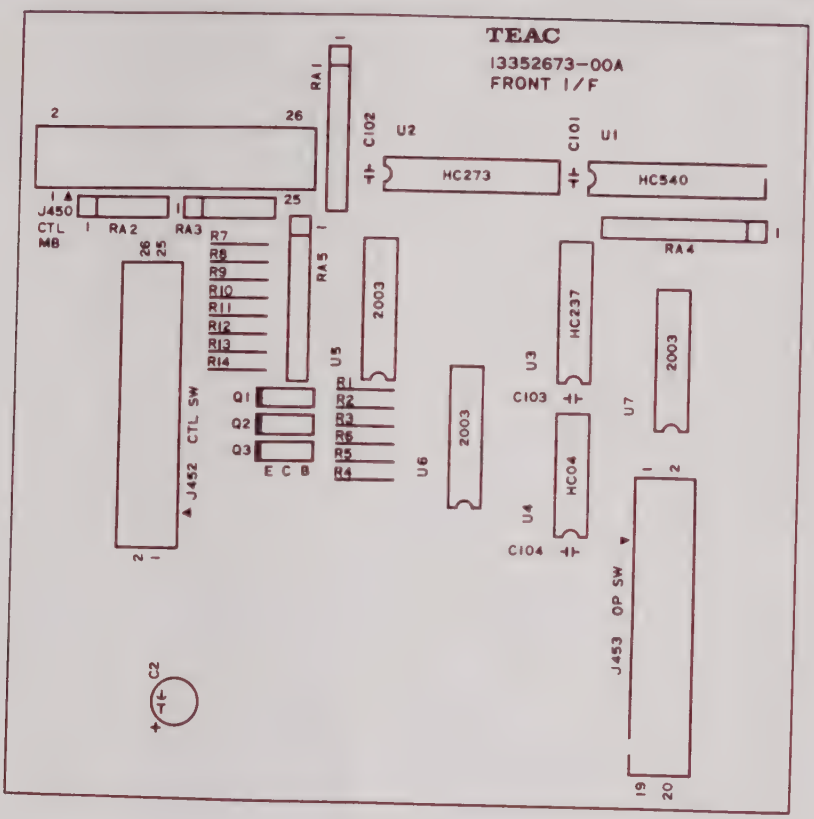

PARTS LIST

Ref. No.	Part No.	Description		
	1555267300	Front I/F PCBA		
– ICs –				
U1	*13442695	IC		MC74HC273N
U2	*13443080	IC		MC74HC540N
U3	*13442683	IC		MC74HC237N
U4	*13442151	IC		MC74HC04N
– Transistor –				
U5-U7	*13428107	Transistor Array		μPA2003C
Q1-Q3	*13421182	Transistor		2SA881-Q
– Capacitor –				
C1	12904098	Electrolytic	47μF	25V
C2	12904097	Electrolytic	100μF	16V
C101-C104	12416104	Ceramic	0.1μF	50V
– Resistor –				
R1-R3	11193222	Carbon	2.2KΩ	¼W
R4-R6	11193333	Carbon	33KΩ	¼W
R7-R14	11193470	Carbon	47Ω	¼W
RA1	13497868	Resistor Array		22KΩx8
RA2 RA3	13497768	Resistor Array		22KΩx4
RA4, RA5	13497868	Resistor Array		22KΩx8
– Miscellaneous –				
J450	13123309	Connector		HIF3FB-26PA-2.54DS
J452	13123309	Connector		HIF3FB-26PA-2.54DS
J453	13123308	Connector		HIF3FB-20P-2.54DS
J454	13150604	Connector, 6P		

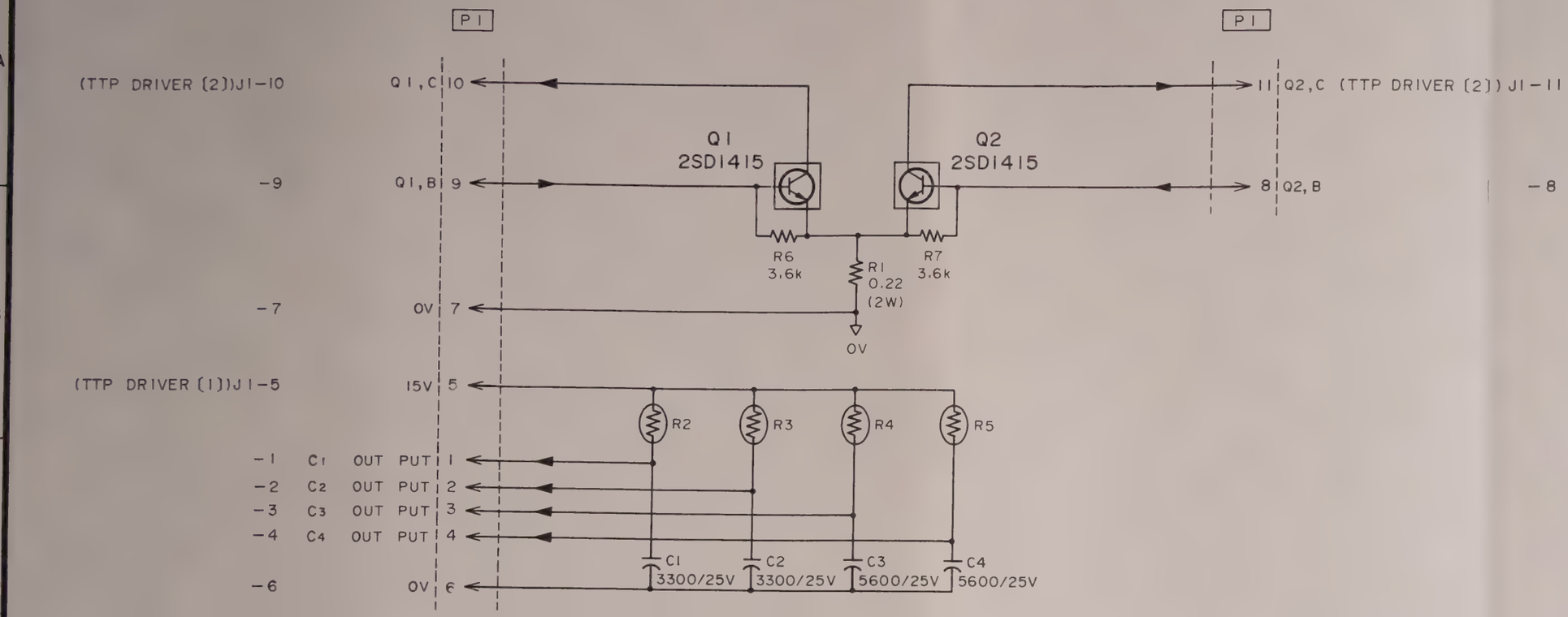

R2,3,4,5 : PTH623H01 AR100 M140

NOTE: UNLESS OTHERWISE SPECIFIED ALL RESISTORS ARE IN OHMS 1/4W, 5% AND ALL CAPACITORS ARE IN MICROFARADS.

PRINTED CIRCUIT BOARD – SUB DRIVER PCBA –

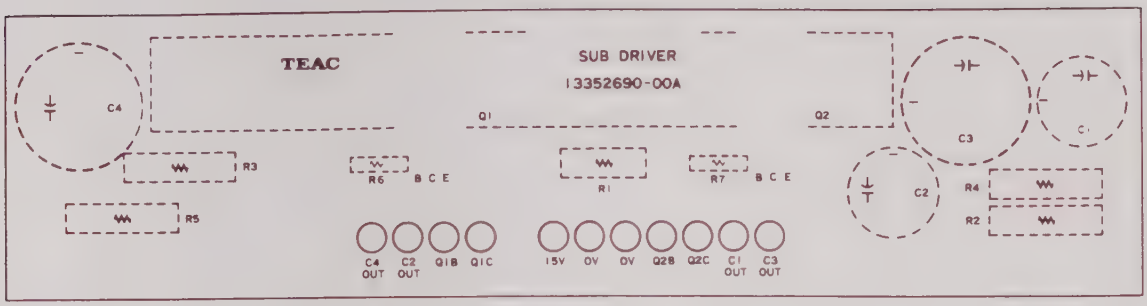

PART LIST

Ref. No.	Part No.	Description		
	1555269000	**Sub Driver PCBA**		
– Transistor –				
Q1, Q2	*13427173	Transistor	2SD1415	
– Capacitor –				
C1, C2	12904506	Electrolytic	3300μF	25V
C3, C4	12906582	Electrolytic	5600μF	25V
– Resistor –				
R1	11984482	Metal Film	0.22Ω	2W
R2-R5	*13418089	Posistor	10Ω	±20%
R6, R7	11173362	Carbon	3.6KΩ	¼W
– Miscellaneous –				
	1619118100	Heatsink		
	1641130800	Screw	M3x8	
	13150417	Housing	5051-11	
	13199203	Contactor		

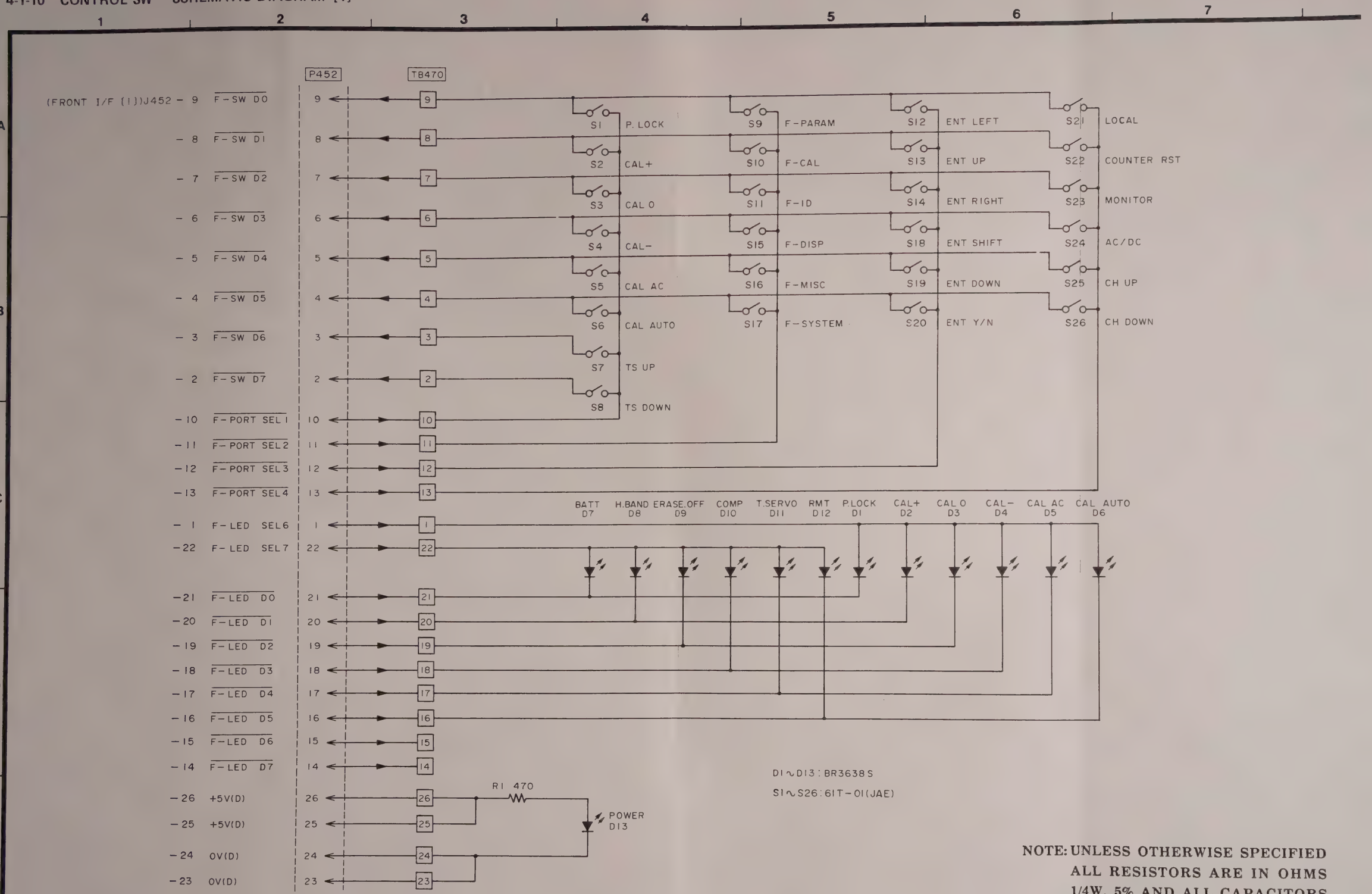

D1∿D13 : BR3638S

S1∿S26 : 61T-01(JAE)

NOTE: UNLESS OTHERWISE SPECIFIED ALL RESISTORS ARE IN OHMS 1/4W, 5% AND ALL CAPACITORS ARE IN MICROFARADS.

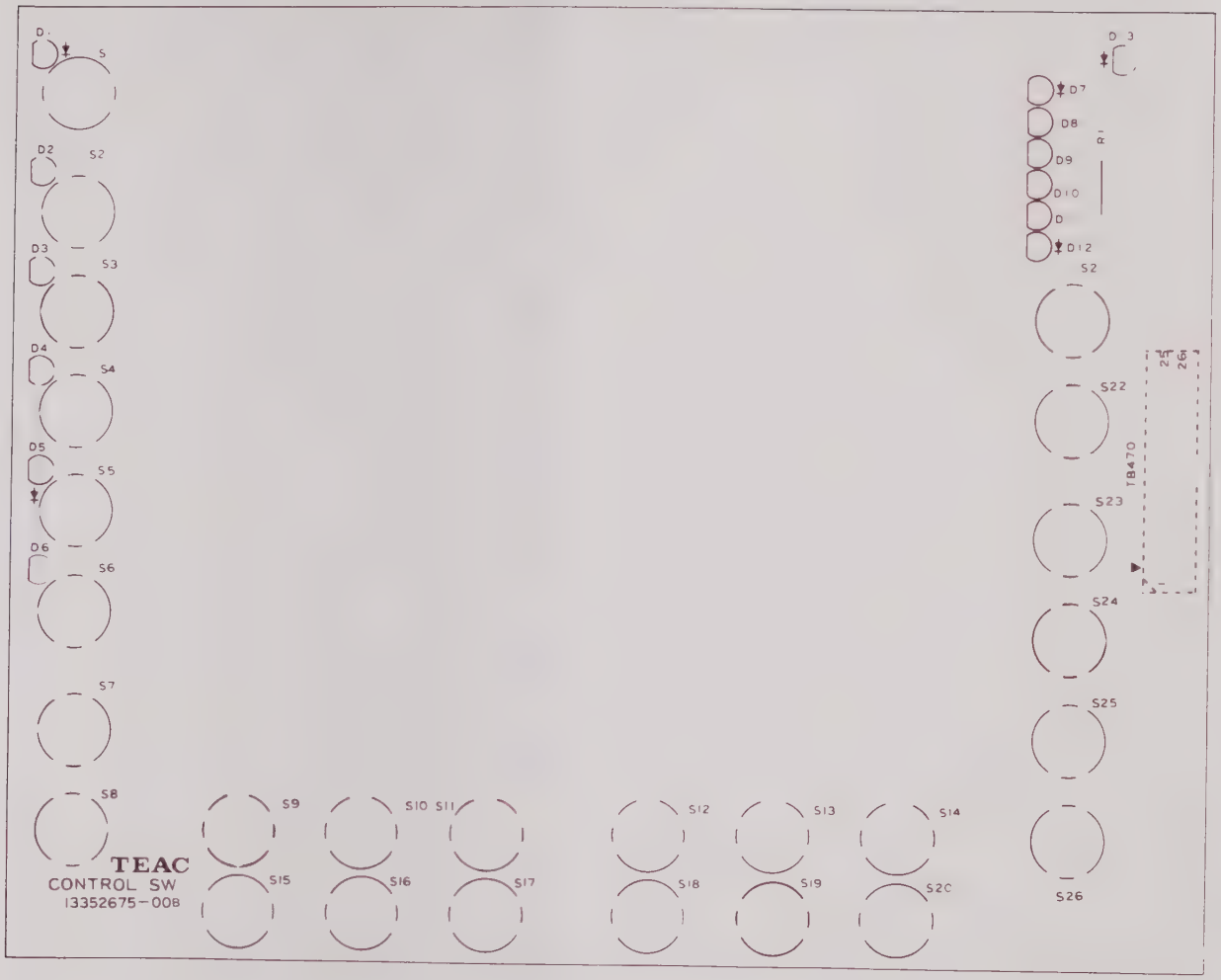

PARTS LIST

Ref. No.	Part No.	Description		
	1555267500	Control SW PCBA		
– Diodes –				
D1-D13	*13419356	L.E.D	BR3638S	
– Resistors –				
R1	111934711	Carbon	470Ω	¼W
– Switches –				
S1-S26	*13222387	Switch, Push	61T-01	

4-1-11 OPERATE SW SCHEMATIC DIAGRAM [1]

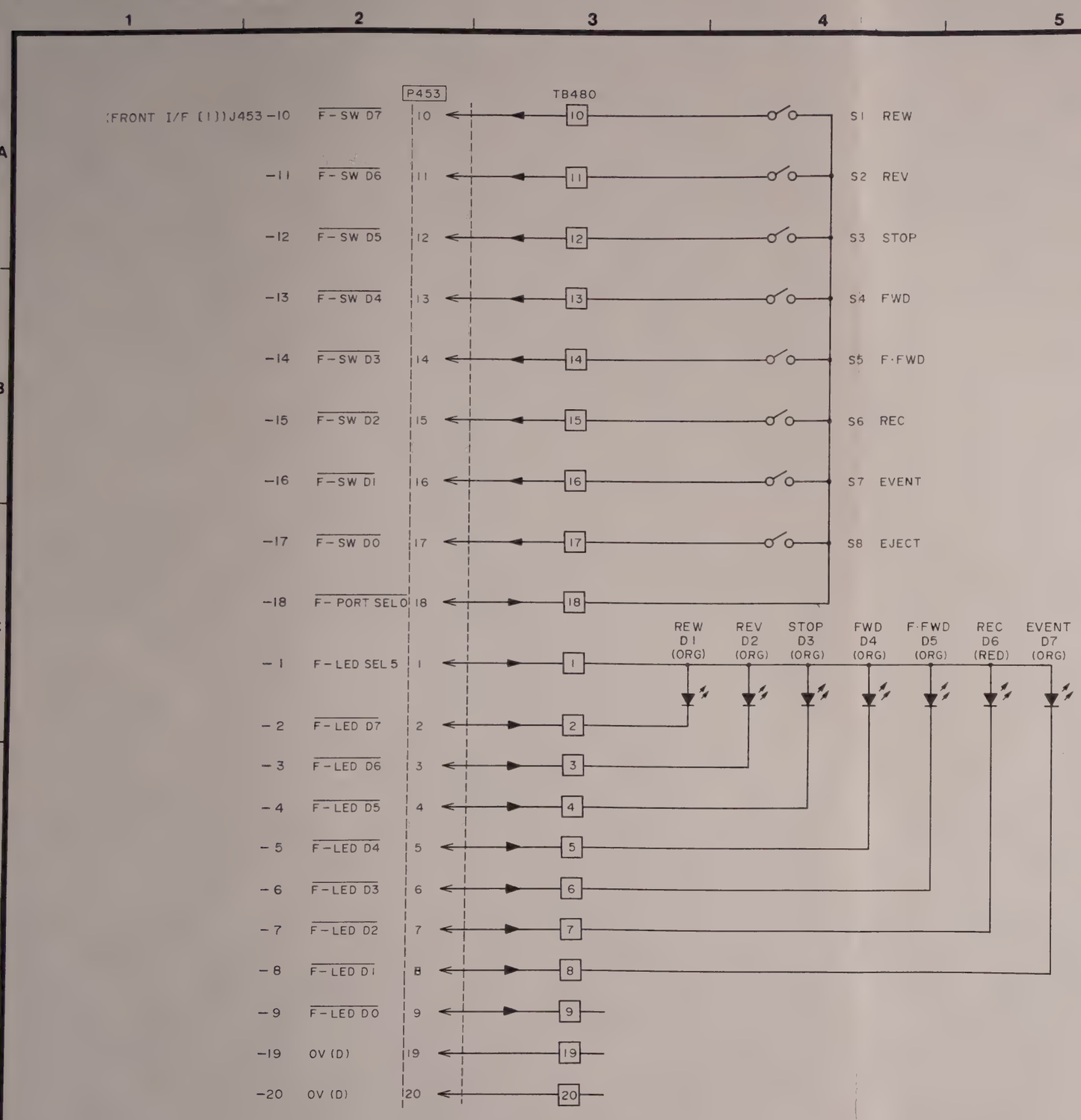

D6 : BR3638S

D1∿D5 D7 : AA3638S

S1∿S8 : 61T-01(JAE)

NOTE: UNLESS OTHERWISE SPECIFIED ALL RESISTORS ARE IN OHMS 1/4W, 5% AND ALL CAPACITORS ARE IN MICROFARADS.

PRINTED CIRCUIT BOARD – OPERATE SW –

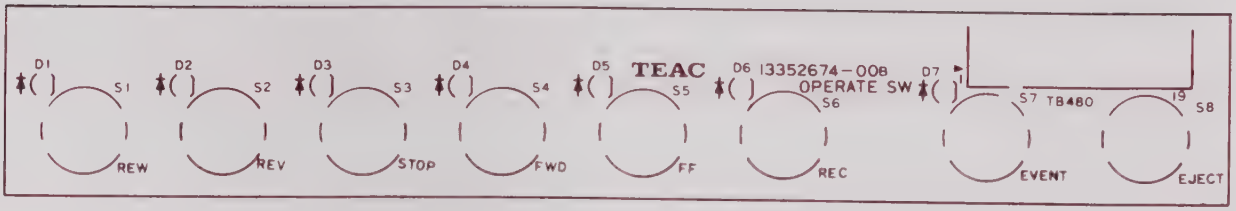

PARTS LIST

Ref. No.	Part No.	Description	
	1555267400	**Operate SW PCBA**	
– Diodes –			
D1	*13419356	L.E.D	BR3638S
D2-D7	*13419357	L.E.D	AA3638S
– Switches –			
S1-S8	*13222387	Switch, Push	61T-01

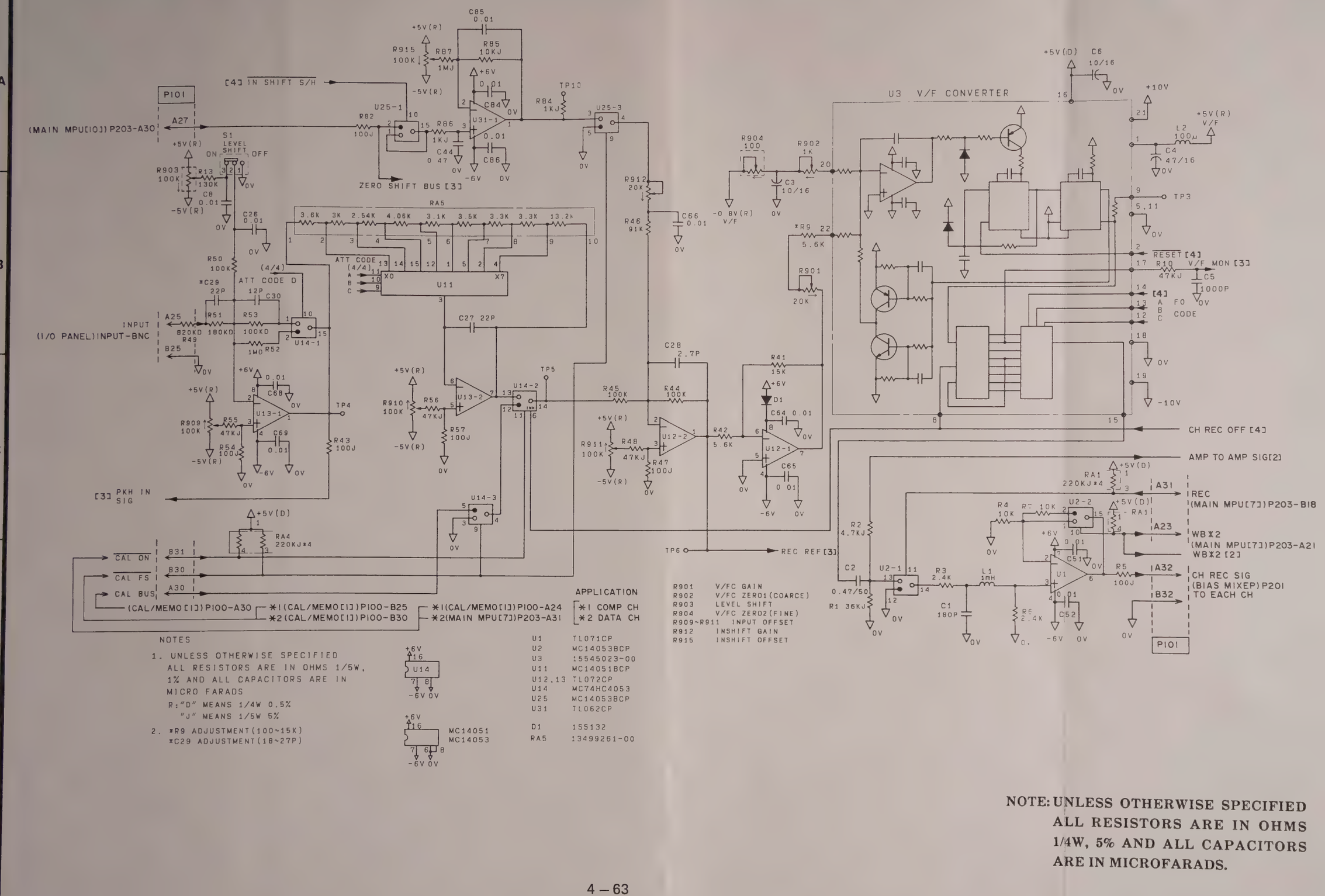

R901 V/FC GAIN
R902 V/FC ZERO1(COARCE)
R903 LEVEL SHIFT
R904 V/FC ZERO2(FINE)
R909~R911 INPUT OFFSET
R912 INSHIFT GAIN
R915 INSHIFT OFFSET

NOTES

1. UNLESS OTHERWISE SPECIFIED ALL RESISTORS ARE IN OHMS 1/5W, 1% AND ALL CAPACITORS ARE IN MICRO FARADS
   R:"D" MEANS 1/4W 0.5%
   "J" MEANS 1/5W 5%
2. *R9 ADJUSTMENT(100~15K)
   *C29 ADJUSTMENT(18~27P)

U1	TL071CP
U2	MC14053BCP
U3	15545023-00
U11	MC14051BCP
U12,13	TL072CP
U14	MC74HC4053
U25	MC14053BCP
U31	TL062CP
D1	1SS132
RA5	13499261-00

NOTE: UNLESS OTHERWISE SPECIFIED ALL RESISTORS ARE IN OHMS 1/4W, 5% AND ALL CAPACITORS ARE IN MICROFARADS.

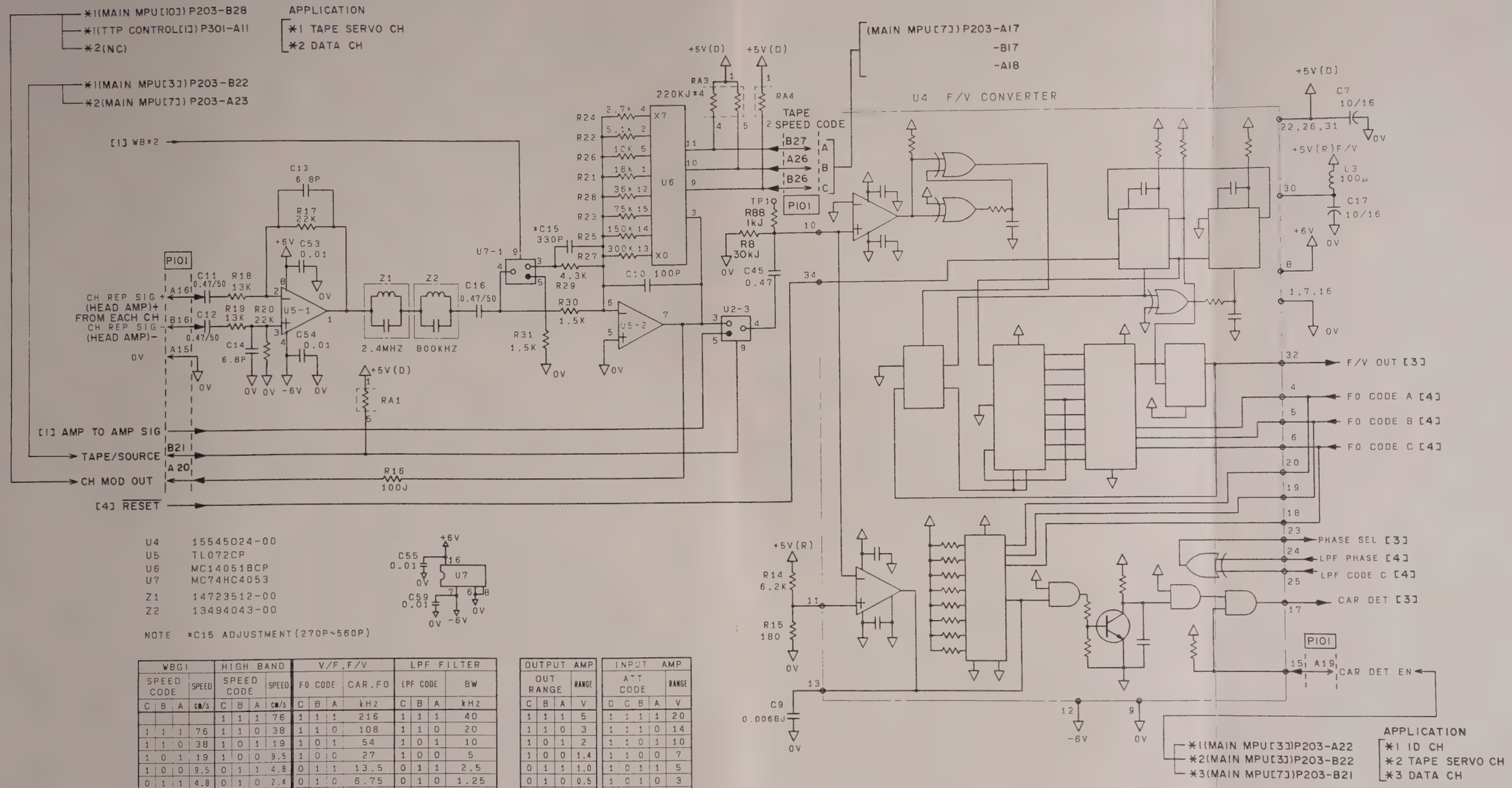

U4	15545024-00
U5	TL072CP
U6	MC14051BCP
U7	MC74HC4053
Z1	14723512-00
Z2	13494043-00

NOTE *C15 ADJUSTMENT (270P~560P)

WBGI SPEED CODE C	B	A	SPEED cm/s
1	1	1	76
1	1	0	38
1	0	1	19
1	0	0	9.5
0	1	1	4.8
0	1	0	2.4
0	0	1	1.2

HIGH BAND SPEED CODE C	B	A	SPEED cm/s
1	1	1	76
1	0	1	19
1	0	0	9.5
0	1	1	4.8
0	1	0	2.4
0	0	1	1.2
0	0	0	0.6

V/F,F/V FO CODE C	B	A	CAR.FO kHz
1	1	1	216
1	1	0	108
1	0	1	54
1	0	0	27
0	1	1	13.5
0	1	0	6.75
0	0	1	3.375
0	0	0	1.6875

LPF FILTER LPF CODE C	B	A	BW kHz
1	1	1	40
1	1	0	20
1	0	1	10
1	0	0	5
0	1	1	2.5
0	1	0	1.25
0	0	1	0.625
0	0	0	0.3125

OUTPUT AMP OUT RANGE C	B	A	RANGE V
1	1	1	5
1	1	0	3
1	0	1	2
1	0	0	1.4
0	1	1	1.0
0	1	0	0.5
0	0	1	0.2
0	0	0	0.1

INPUT AMP ATT CODE D	C	B	A	RANGE V
1	1	1	1	20
1	1	1	0	14
1	1	0	1	10
1	1	0	0	7
1	0	1	1	5
1	0	1	0	3
1	0	0	1	2
0	1	1	0	1.4
0	1	0	1	1.0
0	1	0	0	0.7
0	0	1	1	0.5
0	0	1	0	0.3
0	0	0	1	0.2
0	0	0	0	0.1

NOTE: UNLESS OTHERWISE SPECIFIED ALL RESISTORS ARE IN OHMS 1/4W, 5% AND ALL CAPACITORS ARE IN MICROFARADS.

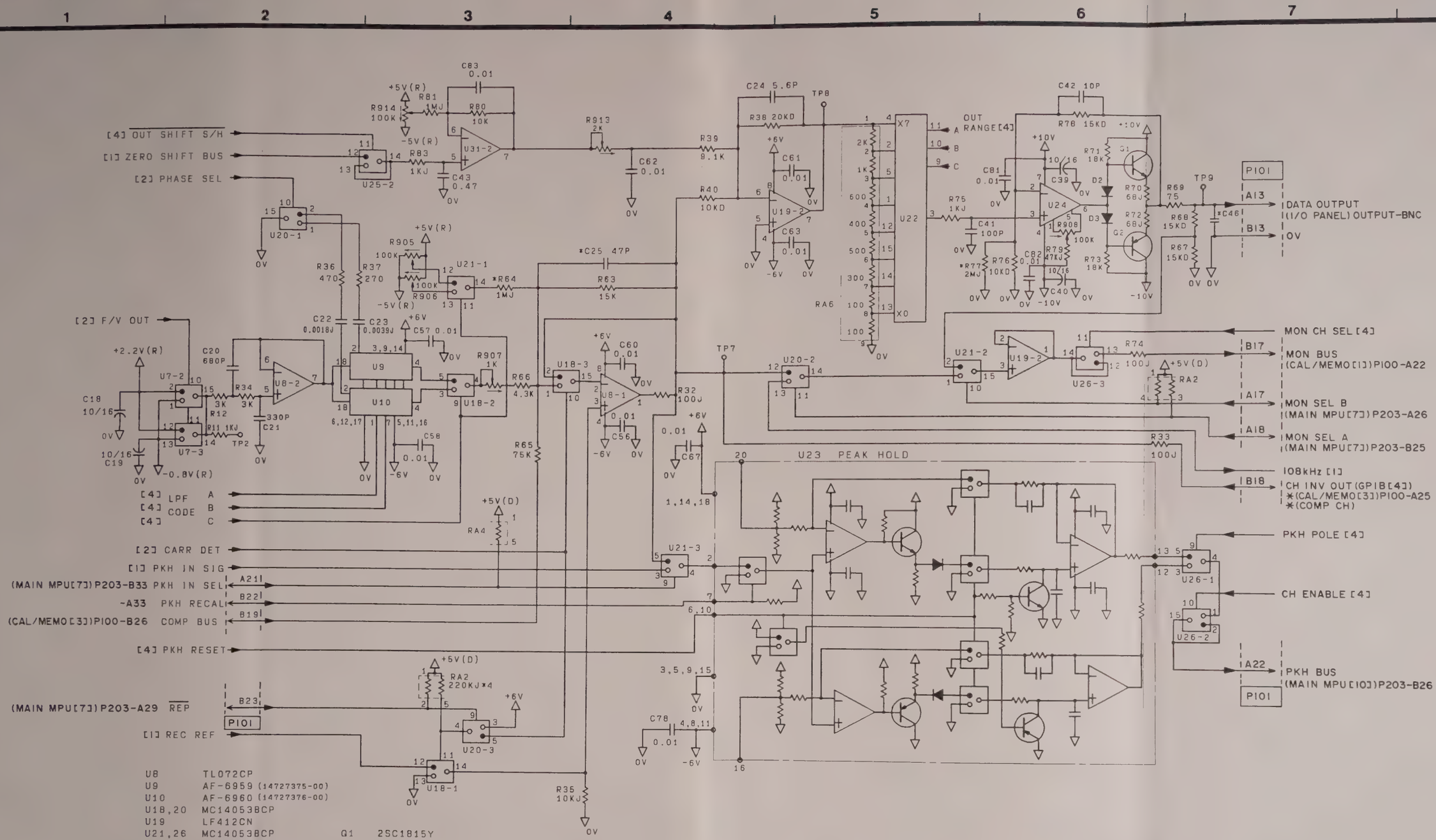

NOTE: UNLESS OTHERWISE SPECIFIED ALL RESISTORS ARE IN OHMS 1/4W, 5% AND ALL CAPACITORS ARE IN MICROFARADS.

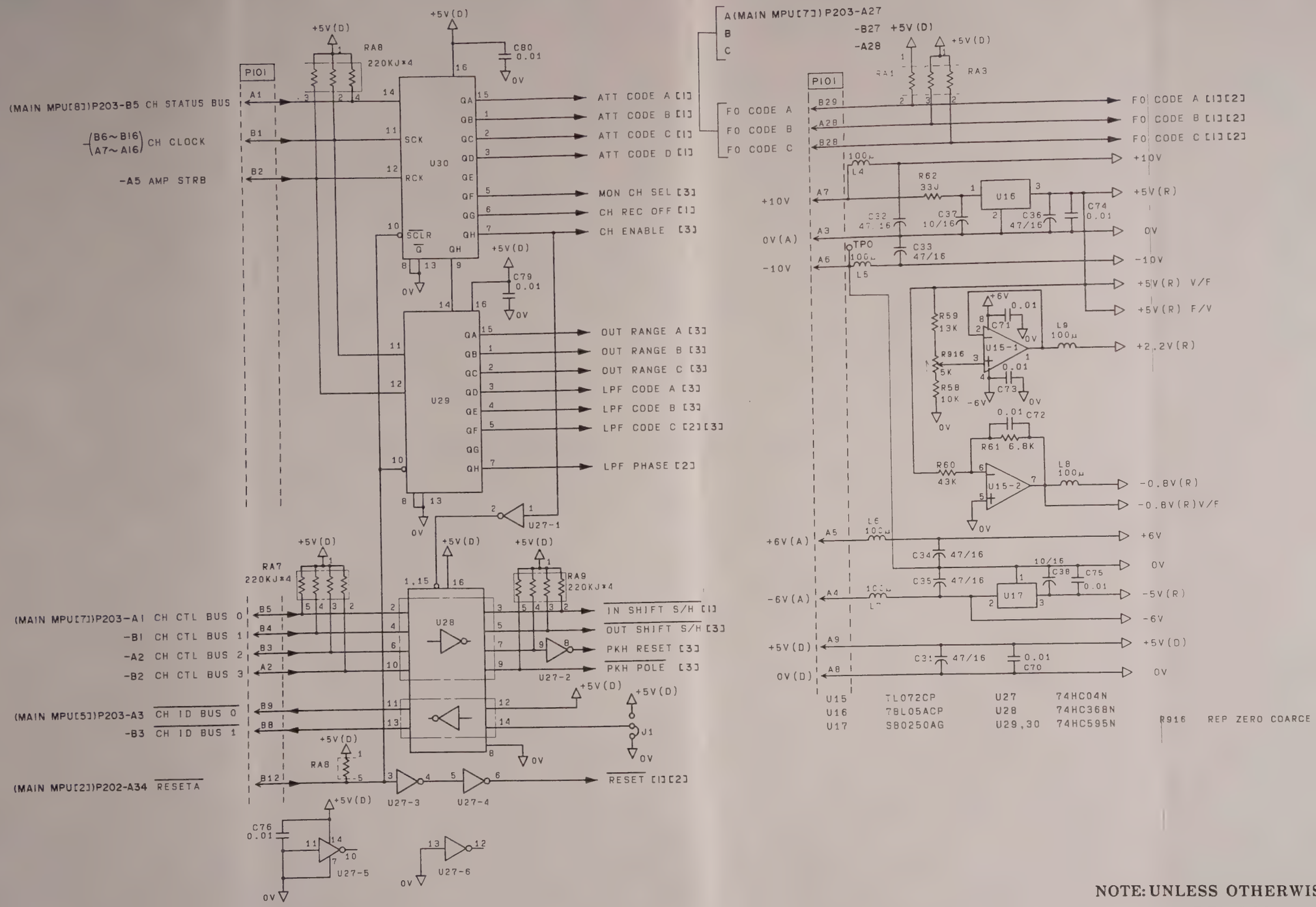

NOTE: UNLESS OTHERWISE SPECIFIED ALL RESISTORS ARE IN OHMS 1/4W, 5% AND ALL CAPACITORS ARE IN MICROFARADS.

PRINTED CIRCUIT BOARD – FM AMP –

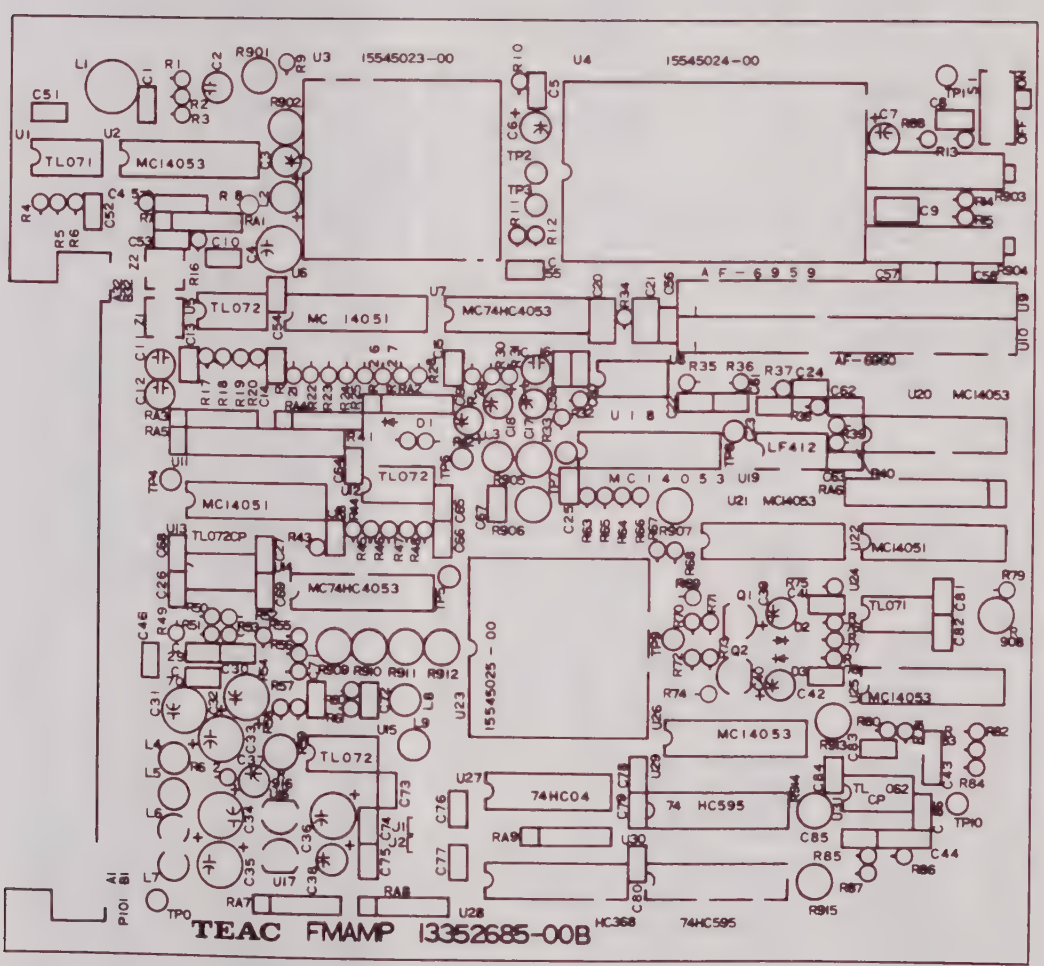

Ref. No.	Part No.	Description		
	1555268500	**FM Amp PCBA**		
– ICs –				
U1	*13447276	IC	TL071P	
U2	*13441434	IC	MC14053CP-BCP	
U3	1554502300	V/F Converter PCBA		
U4	1554502400	F/V Converter PCBA		
U5	*13447278	IC	TL072P	
U6	*13441441	IC	MC14051BCP	
U7	*13443145	IC	MC74HC4053N	
U8	*13447278	IC	TL072P	
U9	*1472737500	Filter, Lowpass	AF-6959	
U10	*1472737600	Filter, Lowpass	AF-6960	
U11	*13441441	IC	MC14051BCP	
U12	*13447278	IC	TL072P	
U13	*13447278	IC	TL072P	
U14	*13443145	IC	MC74HC4053N	
U15	*13447278	IC	TL072P	
U16	*13447243	IC	MC78L05ACP	
U17	*13447689	IC	S80250AG	
U18	*13441434	IC	MC14053CP-BCP	
U19	*13447373	IC	LF412CN	
U20	*13441434	IC	MC14053CP-BCP	
U21	*13441434	IC	MC14053CP-BCP	
U22	*13441441	IC	MC14051BCP	
U23	1554502500	Peak Hold PCBA		
U24	*13447276	IC	TL071P	
U25	*13441434	IC	MC14053CP-BCP	
U26	*13441434	IC	MC14053CP-BCP	
U27	*13442151	IC	MC74HC04N	
U28	*13442558	IC	MC74HC368N	
U29	*13442867	IC	MC74HC595N	
U30	*13442867	IC	MC74HC595N	
U31	*13447295	IC	TL062CP	
– Transistors –				
Q1	*13424193	Transistor	2SC1815-Y	
Q2	*13421123	Transistor	2SA1015-Y	
– Diodes –				
D1	*13411383	Diode	1SS132	
D2	*13411383	Diode	1SS132	
D3	*13411383	Diode	1SS132	
– Capacitors –				
C1	12901304	Ceramic	180pF	100V
C2	12904084	Electrolytic	0.47μF	50V (BP)
C3	12901900	Electrolytic	10μF	16V
C4	12902015	Electrolytic	47μF	16V
C5	12901313	Ceramic	1000pF	100V
C6	12901900	Electrolytic	10μF	16V
C7	12901900	Electrolytic	10μF	16V
C8	12901330	Ceramic	0.01μF	63V
C9	12904039	Metallized	6800pF	50V
C10	12900476	Ceramic	100pF	100V
C11	12904084	Electrolytic	0.47μF	50V (BP)
C12	12904084	Electrolytic	0.47μF	50V (BP)
C13	12900462	Ceramic	6.8pF	100V
C14	12900462	Ceramic	6.8pF	100V
C15	12901309	Ceramic	470pF	100V
C16	12904084	Electrolytic	0.47μF	50V (BP)
C17	12901900	Electrolytic	10μF	16V
C18	12901900	Electrolytic	10μF	16V
C19	12901900	Electrolytic	10μF	16V
C20	12454681	Metallized	680pF	100V
C21	12454331	Metallized	330pF	100V
C22	12904032	Metallized	1800pF	50V
C23	12904036	Metallized	3900pF	50V
C24	12900461	Ceramic	5.6pF	100V
C25	12900472	Ceramic	47pF	100V
C26	12901330	Ceramic	0.01μF	63V
C27	12900468	Ceramic	22pF	100V
C28	12900457	Ceramic	2.7pF	100V
C29	12900468	Ceramic	22pF	100V
C30	12900465	Ceramic	12pF	100V

Ref. No.	Part No.	Description		
C31-C36	12902015	Electrolytic	47μF	16V
C37-C40	12901900	Electrolytic	10μF	16V
C41	12900476	Ceramic	100pF	100V
C42	12900464	Ceramic	10pF	100V
C43	12388474	Ceramic	0.47μF	50V
C44	12388474	Ceramic	0.47μF	50V
C45	12388474	Ceramic	0.47μF	50V
C51-C76	12901330	Ceramic	0.01μF	63V
C78-C86	12901330	Ceramic	0.01μF	63V
Resistors –				
R1	11190363	Carbon	36KΩ	1/5W
R2	11190472	Carbon	4.7KΩ	1/5W
R3	11070242	Metal Film	2.4KΩ	1/5W
R4	11070103	Metal Film	10KΩ	1/5W
R5	11190101	Carbon	100Ω	1/5W
R6	11070242	Metal Film	2.4KΩ	1/5W
R7	11070103	Metal Film	10KΩ	1/5W
R8	11190303	Carbon	30KΩ	1/5W
R9	11070562	Metal Film	5.6KΩ	1/5W
R10	11190473	Carbon	47KΩ	1/5W
R11	11190102	Carbon	1KΩ	1/5W
R12	11070302	Metal Film	3KΩ	1/5W
R13	11070134	Metal Film	130KΩ	1/5W
R14	11070622	Metal Film	6.2KΩ	1/5W
R15	11070181	Metal Film	180KΩ	1/5W
R16	11190101	Carbon	100Ω	1/5W
R17	11070223	Metal Film	22KΩ	1/5W
R18	11070133	Metal Film	13KΩ	1/5W
R19	11070133	Metal Film	13KΩ	1/5W
R20	11070223	Metal Film	22KΩ	1/5W
R21	11070183	Metal Film	18KΩ	1/5W
R22	11070512	Metal Film	5.1KΩ	1/5W
R23	11070753	Metal Film	75KΩ	1/5W
R24	11070272	Metal Film	2.7KΩ	1/5W
R25	11070154	Metal Film	150KΩ	1/5W
R26	11070103	Metal Film	10KΩ	1/5W
R27	11070304	Metal Film	300KΩ	1/5W
R28	11070363	Metal Film	36KΩ	1/5W
R29	11070432	Metal Film	4.3KΩ	1/5W
R30	11070152	Metal Film	1.5KΩ	1/5W
R31	11070152	Metal Film	1.5KΩ	1/5W
R32	11190101	Carbon	100Ω	1/5W
R33	11190101	Carbon	100Ω	1/5W
R34	11070302	Metal Film	3KΩ	1/5W
R35	11190103	Carbon	10KΩ	1/5W
R36	11070471	Metal Film	470Ω	1/5W
R37	11070271	Metal Film	270Ω	1/5W
R38	11078203	Metal Film	20KΩ	¼W
R39	11070912	Metal Film	9.1KΩ	1/5W
R40	11078103	Metal Film	10KΩ	¼W
R41	11070153	Metal Film	15KΩ	1/5W
R42	11070562	Metal Film	5.6KΩ	1/5W
R43	11190101	Carbon	100Ω	1/5W
R44	11070104	Metal Film	100KΩ	1/5W
R45	11070104	Metal Film	100KΩ	1/5W
R46	11070913	Metal Film	91KΩ	1/5W
R47	11190101	Carbon	100Ω	1/5W
R48	11190473	Carbon	47KΩ	1/5W
R49	11078824	Metal Film	820KΩ	¼W
R50	11070104	Metal Film	100KΩ	1/5W
R51	11078184	Metal Film	180KΩ	¼W
R52	11078105	Metal Film	1MΩ	¼W
R53	11078104	Metal Film	100KΩ	¼W
R54	11190101	Carbon	100Ω	1/5W
R55	11190473	Carbon	47KΩ	1/5W
R56	11190473	Carbon	47KΩ	1/5W
R57	11190101	Carbon	100Ω	1/5W
R58	11070103	Metal Film	10KΩ	1/5W
R59	11070133	Metal Film	13KΩ	1/5W
R60	11070433	Metal Film	43KΩ	1/5W
R61	11070682	Metal Film	6.8KΩ	1/5W

Ref. No.	Part No.	Description		
R62	11190330	Carbon	33Ω	1/5W
R63	11070153	Metal Film	15KΩ	1/5W
R64	11190105	Carbon	1MΩ	1/5W
R65	11070753	Metal Film	75KΩ	1/5W
R66	11070432	Metal Film	4.3KΩ	1/5W
R67	11078153	Metal Film	15KΩ	¼W
R68	11078153	Metal Film	15KΩ	¼W
R69	11070750	Metal Film	75Ω	1/5W
R70	11190680	Carbon	68Ω	1/5W
R71	11070183	Metal Film	18KΩ	1/5W
R72	11190680	Carbon	68Ω	1/5W
R73	11070183	Metal Film	18KΩ	1/5W
R74	11190101	Carbon	100Ω	1/5W
R75	11190102	Carbon	1KΩ	1/5W
R76	11078103	Metal Film	10KΩ	¼W
R77	11190205	Carbon	2MΩ	1/5W
R78	11078153	Metal Film	15KΩ	¼W
R79	11190303	Carbon	30KΩ	1/5W
R80	11190103	Carbon	10KΩ	1/5W
R81	11190105	Carbon	1MΩ	1/5W
R82	11190101	Carbon	100Ω	1/5W
R83	11190102	Carbon	1KΩ	1/5W
R84	11190102	Carbon	1KΩ	1/5W
R85	11190103	Carbon	10KΩ	1/5W
R86	11190102	Carbon	1KΩ	1/5W
R87	11190105	Carbon	1MΩ	1/5W
R88	11190102	Carbon	1KΩ	1/5W
R901	*13256879	Variable	20KΩ	
R902	*13256875	Variable	1KΩ	
R903	*13257377	Variable	100KΩ	
R904	13257368	Variable	100Ω	
R905	*13256881	Variable	100KΩ	
R906	*13256881	Variable	100KΩ	
R907	*13256875	Variable	1KΩ	
R908-R911	*13256881	Variable	100KΩ	
R912	*13256879	Variable	20KΩ	
R913	*13256876	Variable	2KΩ	
R914	*13256881	Variable	100KΩ	
R915	*13256881	Variable	100KΩ	
R916	*13256877	Variable	5KΩ	
RA1-RA4	*13497774	Resistor Array	220KΩx4	
RA5	*1349926100	Resistor Array	220KΩx8	
RA6	*1349926000	Resistor Array	220KΩx9	
RA7	*13497774	Resistor Array	220KΩx4	
RA8	*13497774	Resistor Array	220KΩx4	
RA9	*13497774	Resistor Array	220KΩx4	
– Miscellaneous –				
L1	14723513	Coil, Choke	1mH	
L2-L9	14723477	Coil, Choke	100mH	
P101	13123334	Connector, 64P		
S1	13224207	Switch, Slide	SSJ312A	
Z1	1472351200	Coil, Bias Trap	2.4MHz	
Z2	1349404300	Coil, Bias Trap	800KHz	
TP0-TP10	13189150	Test Point		
	1627118475	Plate, Name		
	1678789500	Card Puller		
	16353540	Pin	1.5 x 8	

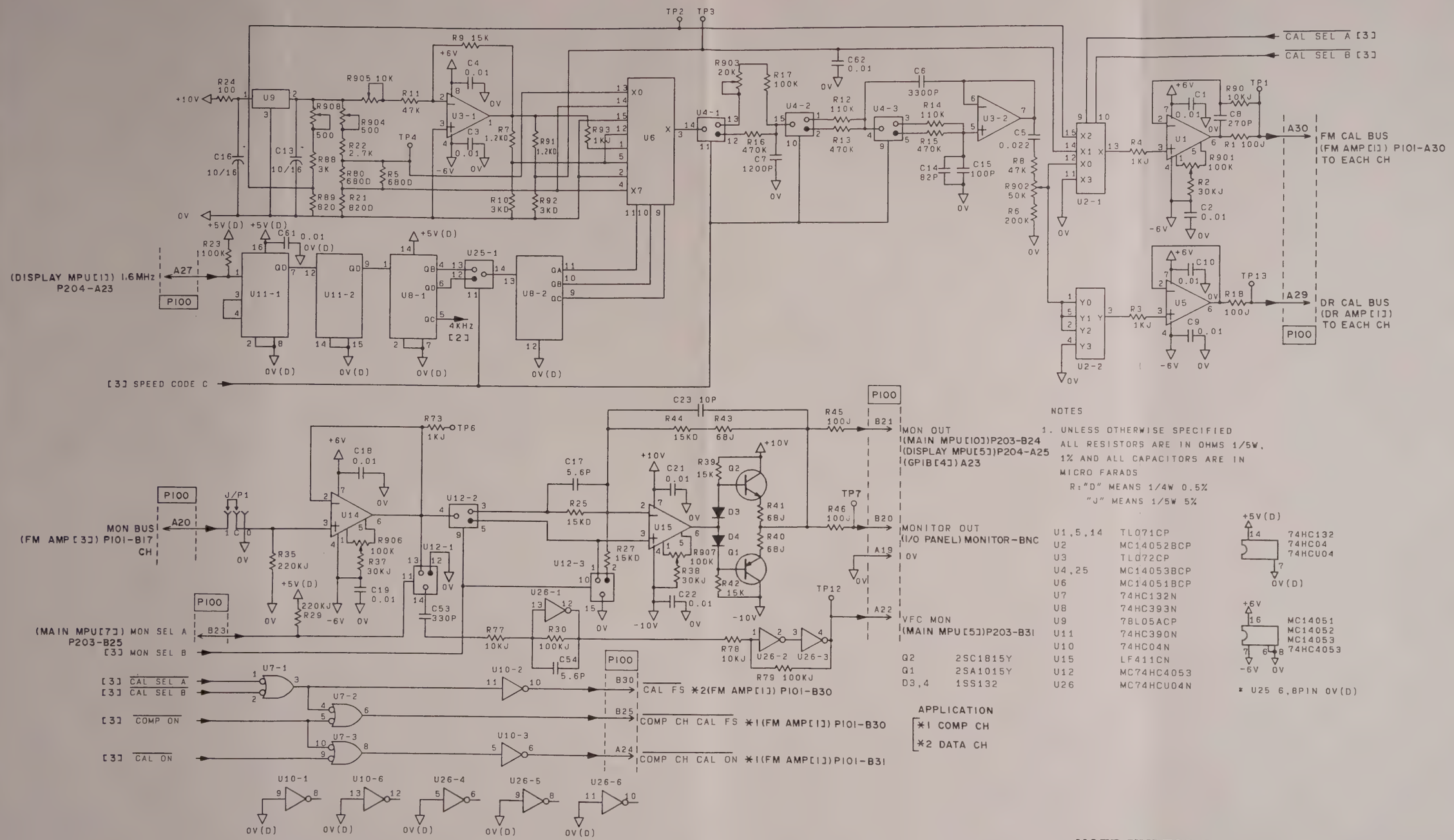

NOTE: UNLESS OTHERWISE SPECIFIED ALL RESISTORS ARE IN OHMS 1/4W, 5% AND ALL CAPACITORS ARE IN MICROFARADS.

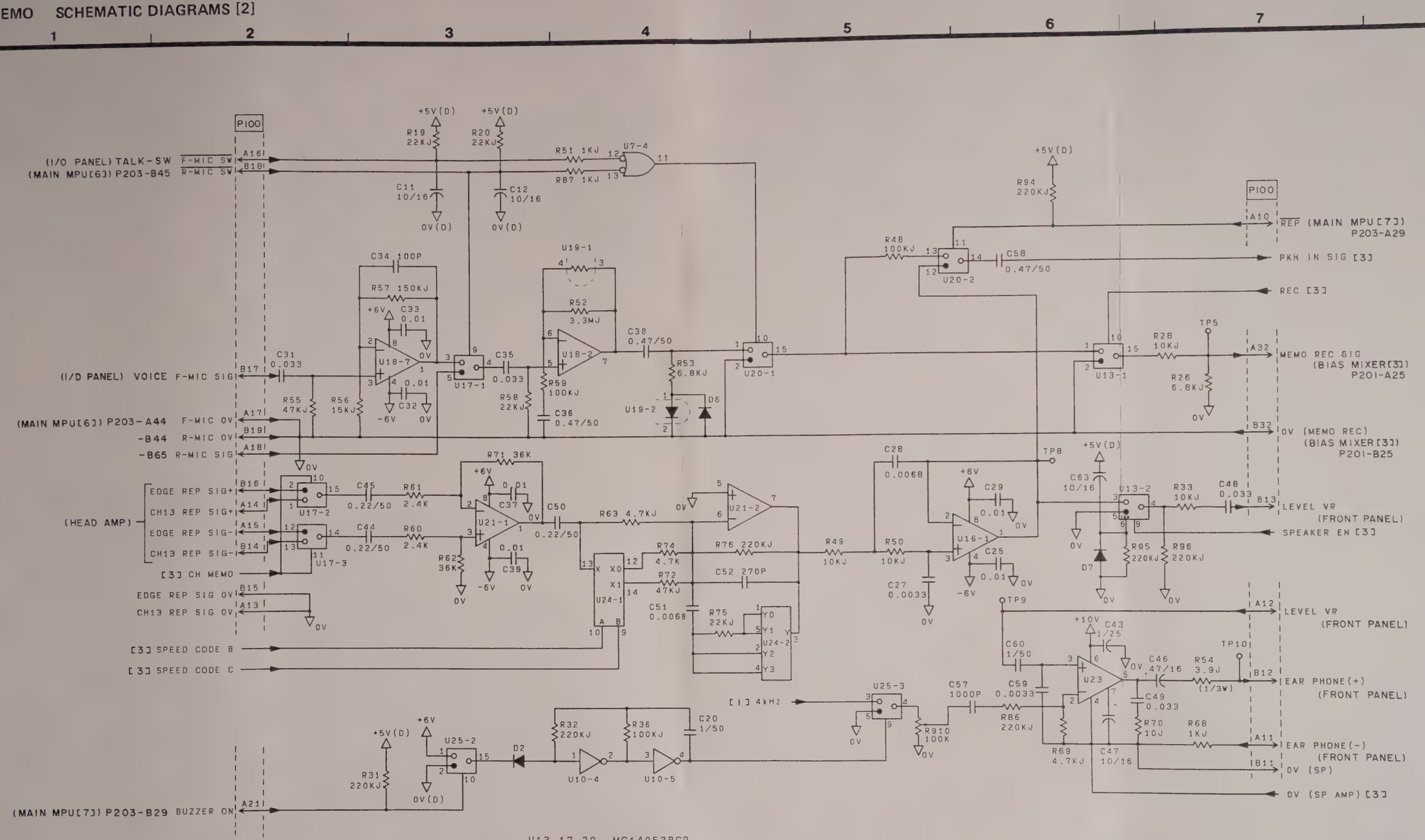

U13,17,20	MC14053BCP
U16,18,21	TL072CP
U19	MCD-521
U23	LM386-1
U24	MC14052BCP
D2,6,7	1SS132

NOTE: UNLESS OTHERWISE SPECIFIED ALL RESISTORS ARE IN OHMS 1/4W, 5% AND ALL CAPACITORS ARE IN MICROFARADS.

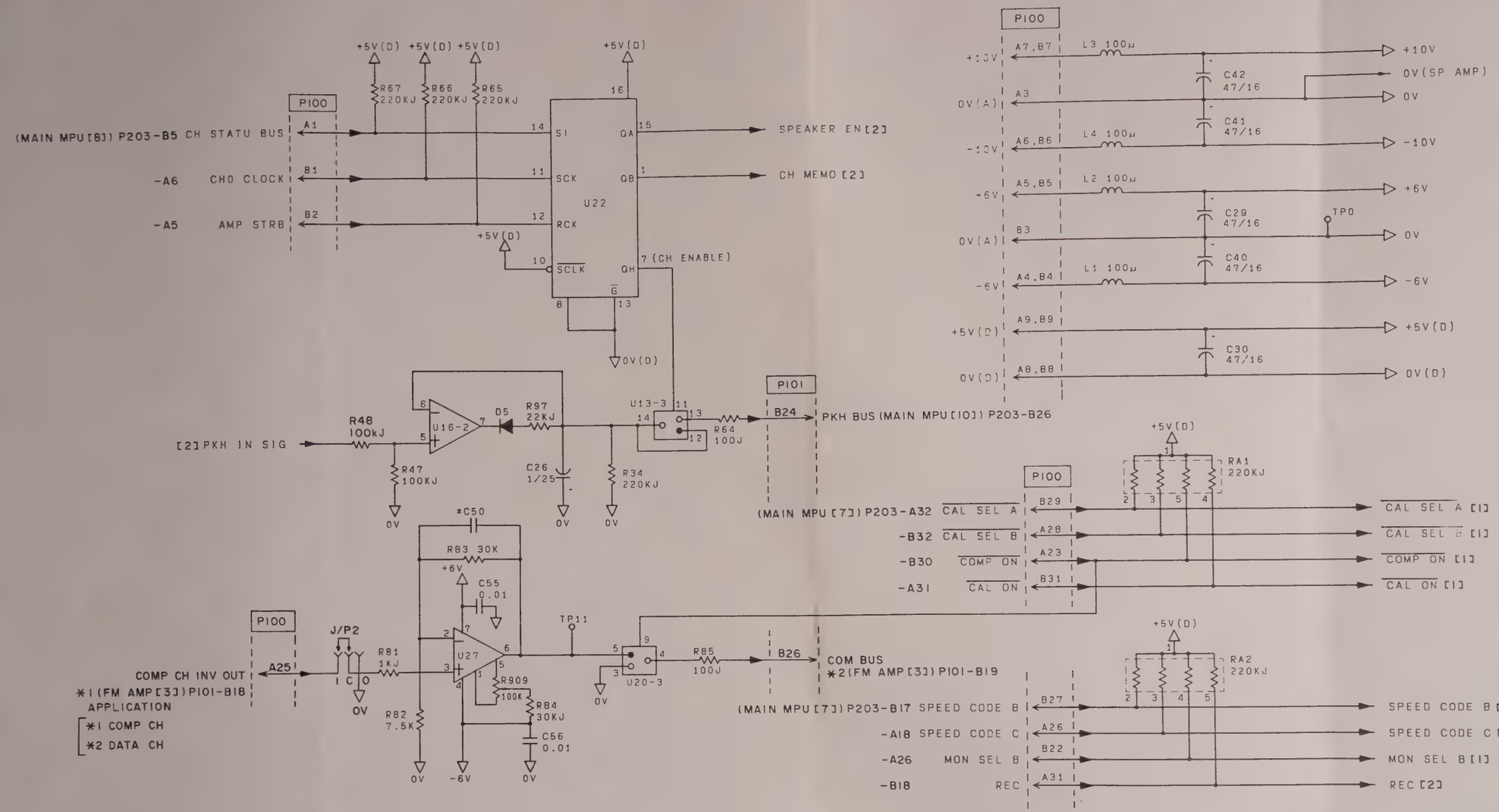

NOTE: *C50 ARE NOT MOUNTED.

U22	74HC595N
U27	TL071CP
D5	1SS132

NOTE: UNLESS OTHERWISE SPECIFIED ALL RESISTORS ARE IN OHMS 1/4W, 5% AND ALL CAPACITORS ARE IN MICROFARADS.

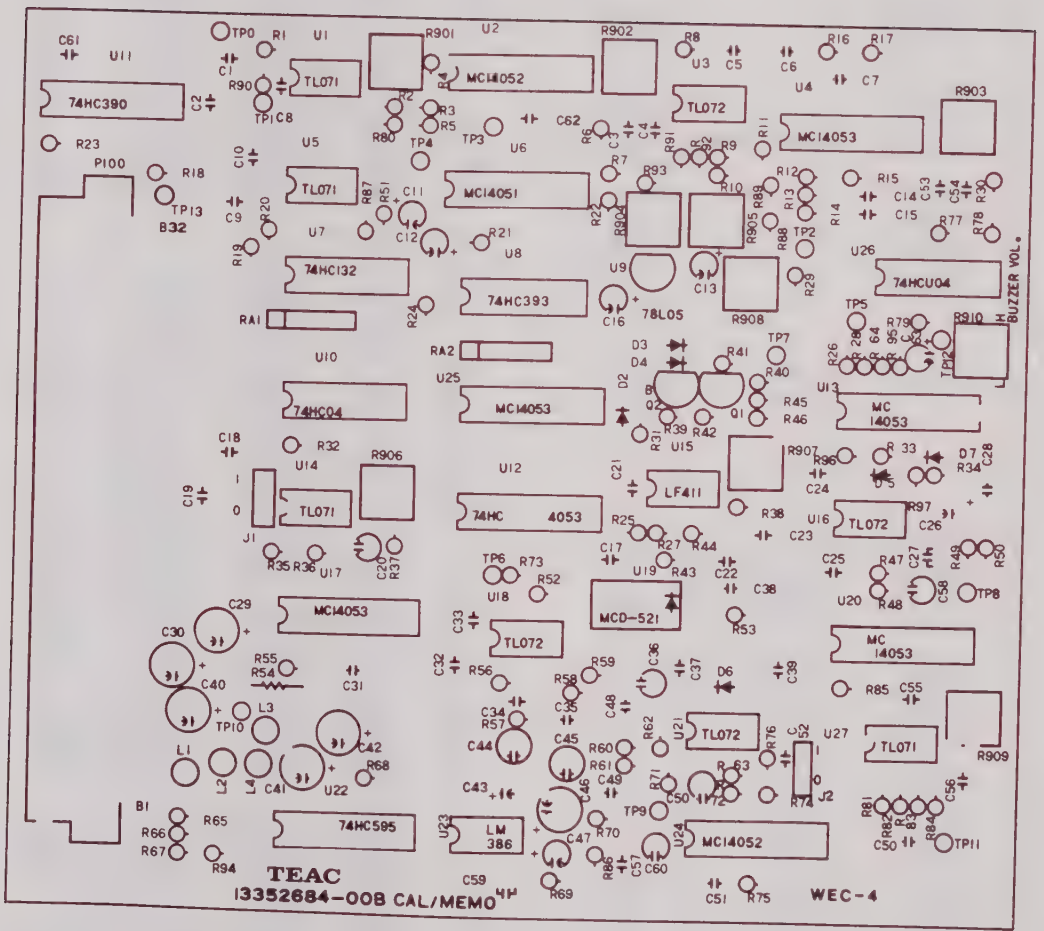
TEAC
13352684-008 CAL/MEMO
WEC-4
74HC390
TL071
MC14052
TL072
MC14053
MC14051
74HC132
74HC393
78L05
74HCU04
74HC04
74HC 4053
LF411
MCD-521
74HC595
LM 386
BUZZER VOL.

Ref. No.	Part No.	Description		
	1555268400	CAL/Memo PCBA		
– ICs –				
U1	*13447276	IC	TL071P	
U2	*13441513	IC	MC14052BCP	
U3	*13447278	IC	TL072P	
U4	*13441434	IC	MC14053CP-BCP	
U5	*13447276	IC	TL071P	
U6	*13441441	IC	MC14051BCP	
U7	*13443146	IC	MC74HC132N	
U8	*13442093	IC	MC74HC393N	
U9	*13447243	IC	MC78L05ACP	
U10	*13442151	IC	MC74HC04N	
U11	*13442709	IC	MC74HC390N	
U12	*13443145	IC	MC74HC4053N	
U13	*13441434	IC	MC14053CP-BCP	
U14	*13447276	IC	TL071P	
U15	*13447367	IC	LF411CN	
U16	*13447278	IC	TL072P	
U17	*13441434	IC	MC14053CP-BCP	
U18	*13447278	IC	TL072P	
U19	*13419128	Photo Coupler	MCD-521H	
U20	*13441434	IC	MC14053CP-BCP	
U21	*13447278	IC	TL072P	
U22	*13442867	IC	MC74HC595N	
U23	*13447136	IC	LM386N-1	
U24	*13441513	IC	MC14052BCP	
U25	*13441434	IC	MC14053CP-BCP	
U26	*13442158	IC	MC74HCU04N	
U27	*13447276	IC	TL071P	
– Transistor –				
Q1	*13421123	Transistor	2SA1015-Y	
Q2	*13424193	Transistor	2SC1815-Y	
– Diodes –				
D2-D7	*13411383	Diode	1SS132	
– Capacitors –				
C1-C4	12901325	Ceramic	0.01μF	63V
C5	12904045	Metallized	0.022μF	50V
C6	12454332	Metallized	3300pF	100V
C7	12454122	Metallized	1200pF	100V
C8	12901288	Ceramic	270pF	100V
C9	12901325	Ceramic	0.01μF	63V
C10	12901325	Ceramic	0.01μF	63V
C11	12901900	Electrolytic	10μF	16V
C12	12901900	Electrolytic	10μF	16V
C13	12901900	Electrolytic	10μF	16V
C14	12900452	Ceramic	82pF	100V
C15	12900453	Ceramic	100pF	100V
C16	12901900	Electrolytic	10μF	16V
C17	12900443	Ceramic	15pF	100V
C18	12901325	Ceramic	0.01μF	63V
C19	12901325	Ceramic	0.01μF	63V
C20	12904085	Electrolytic	1μF	50V (BP)
C21	12901325	Ceramic	0.01μF	63V
C22	12901325	Ceramic	0.01μF	63V
C23	12900443	Ceramic	15pF	100V
C24	12901325	Ceramic	0.01μF	63V
C25	12901325	Ceramic	0.01μF	63V
C26	12901483	Tantalum	1μF	25V
C27	12904035	Metallized	3300pF	50V
C28	12904039	Metallized	6800pF	50V
C29	12902015	Electrolytic	47μF	16V
C30	12902015	Electrolytic	47μF	16V
C31	12904047	Metallized	0.033μF	50V
C32	12901325	Ceramic	0.01μF	63V
C33	12901325	Ceramic	0.01μF	63V
C34	12900453	Ceramic	100pF	100V
C35	12904047	Metallized	0.033μF	50V
C36	12904084	Electrolytic	0.47μF	50V (BP)
C37	12901325	Ceramic	0.01μF	63V
C38	12904084	Electrolytic	0.47μF	50V (BP)
C39	12901325	Ceramic	0.01μF	63V

Ref. No.	Part No.	Description		
C40	12901900	Electrolytic	10μF	16V
C41	12901900	Electrolytic	10μF	16V
C42	12901900	Electrolytic	10μF	16V
C43	12901483	Tantalum	1μF	25V
C44	12904082	Electrolytic	0.22μF	50V (BP)
C45	12904082	Electrolytic	0.22μF	50V (BP)
C46	12901900	Electrolytic	10μF	16V
C47	12901900	Electrolytic	10μF	16V
C48	12904047	Metallized	0.033μF	50V
C49	12904047	Metallized	0.033μF	50V
C50	12904082	Electrolytic	0.22 F	50V (BP)
C51	12904039	Metallized	6800pF	50V
C52	12901288	Ceramic	270pF	100V
C53	12901289	Ceramic	330pF	100V
C54	12900438	Ceramic	5.6pF	100V
C55	12901325	Ceramic	0.01μF	63V
C56	12901325	Ceramic	0.01μF	63V
C57	12901295	Ceramic	1000pF	100V
C58	12904084	Electrolytic	0.47μF	50V (BP)
C59	12904035	Metallized	3300pF	50V
C60	12904085	Electrolytic	1μF	50V (BP)
C61	12901325	Ceramic	0.01μF	63V
C62	12901325	Ceramic	0.01μF	63V
C63	12901900	Electrolytic	10μF	16V
– Resistors –				
R1	11190101	Carbon	100Ω	1/5W
R2	11190303	Carbon	30KΩ	1/5W
R3	11190102	Carbon	1KΩ	1/5W
R4	11190102	Carbon	1KΩ	1/5W
R5	11078681	Metal Film	680Ω	¼W
R6	11070204	Metal Film	200KΩ	1/5W
R7	11078122	Metal Film	1.2KΩ	¼W
R8	11070473	Metal Film	47KΩ	1/5W
R9	11070153	Metal Film	15KΩ	1/5W
R10	11078302	Metal Film	3KΩ	¼W
R11	11070473	Metal Film	47KΩ	1/5W
R12	11070114	Metal Film	110KΩ	1/5W
R13	11070474	Metal Film	470KΩ	1/5W
R14	11070114	Metal Film	110KΩ	1/5W
R15	11070474	Metal Film	470KΩ	1/5W
R16	11070474	Metal Film	470KΩ	1/5W
R17	11070104	Metal Film	100KΩ	1/5W
R18	11190101	Carbon	100Ω	1/5W
R19	11190223	Carbon	22KΩ	1/5W
R20	11190223	Carbon	22KΩ	1/5W
R21	11078821	Metal Film	820Ω	¼W
R22	11070272	Metal Film	2.7KΩ	1/5W
R23	11190104	Carbon	100KΩ	1/5W
R24	11190101	Carbon	100Ω	1/5W
R25	11078153	Metal Film	15KΩ	¼W
R26	11190682	Carbon	6.8KΩ	1/5W
R27	11078153	Metal Film	15KΩ	¼W
R28	11190103	Carbon	10KΩ	1/5W
R29	11190224	Carbon	220KΩ	1/5W
R30	11190104	Carbon	100KΩ	1/5W
R31	11190224	Carbon	220KΩ	1/5W
R32	11190224	Carbon	220KΩ	1/5W
R33	11190103	Carbon	10KΩ	1/5W
R34	11190224	Carbon	220KΩ	1/5W
R35	11190224	Carbon	220KΩ	1/5W
R36	11190104	Carbon	100KΩ	1/5W
R37	11190303	Carbon	30KΩ	1/5W
R38	11190303	Carbon	30KΩ	1/5W
R39	11070153	Metal Film	15KΩ	1/5W
R40	11190680	Carbon	68Ω	1/5W
R41	11190680	Carbon	68Ω	1/5W
R42	11070153	Metal Film	15KΩ	1/5W
R43	11190680	Carbon	68Ω	1/5W
R44	11078153	Metal Film	15KΩ	¼W
R45	11190101	Carbon	100Ω	1/5W

Ref. No.	Part No.	Description		
R46	11190101	Carbon	100Ω	1/5W
R47	11190104	Carbon	100KΩ	1/5W
R48	11190104	Carbon	100KΩ	1/5W
R49	11190103	Carbon	10KΩ	1/5W
R50	11190103	Carbon	10KΩ	1/5W
R51	11190102	Carbon	1KΩ	1/5W
R52	11190335	Carbon	3.3MΩ	1/5W
R53	11190682	Carbon	6.8KΩ	1/5W
R54	11188399	Carbon	3.9Ω	1/3W
R55	11190473	Carbon	47KΩ	1/5W
R56	11190153	Carbon	15KΩ	1/5W
R57	11190154	Carbon	150KΩ	1/5W
R58	11190223	Carbon	22KΩ	1/5W
R59	11190104	Carbon	100KΩ	1/5W
R60	11070242	Metal Film	2.4KΩ	1/5W
R61	11070242	Metal Film	2.4KΩ	1/5W
R62	11070363	Metal Film	36KΩ	1/5W
R63	11190472	Carbon	4.7KΩ	1/5W
R64	11190101	Carbon	100Ω	1/5W
R65	11190224	Carbon	220KΩ	1/5W
R66	11190224	Carbon	220KΩ	1/5W
R67	11190224	Carbon	220KΩ	1/5W
R68	11190102	Carbon	1KΩ	1/5W
R69	11190472	Carbon	4.7KΩ	1/5W
R70	11190100	Carbon	10Ω	1/5W
R71	11070363	Metal Film	36KΩ	1/5W
R72	11190473	Carbon	47KΩ	1/5W
R73	11190102	Carbon	1KΩ	1/5W
R74	11190472	Carbon	4.7KΩ	1/5W
R75	11190223	Carbon	22KΩ	1/5W
R76	11190224	Carbon	220KΩ	1/5W
R77	11190103	Carbon	10KΩ	1/5W
R78	11190103	Carbon	10KΩ	1/5W
R79	11190104	Carbon	100KΩ	1/5W
R80	11078681	Metal Film	680Ω	¼W
R81	11190102	Carbon	1KΩ	1/5W
R82	11070752	Metal Film	7.5KΩ	1/5W
R83	11070303	Metal Film	30KΩ	1/5W
R84	11190303	Carbon	30KΩ	1/5W
R85	11190101	Carbon	100Ω	1/5W
R86	11190224	Carbon	220KΩ	1/5W
R87	11190102	Carbon	1KΩ	1/5W
R88	11078302	Metal Film	3KΩ	¼W
R89	11078821	Metal Film	820Ω	¼W
R90	11190103	Carbon	10KΩ	1/5W
R91	11078122	Metal Film	1.2KΩ	¼W
R92	11078302	Metal Film	3KΩ	¼W
R93	11190102	Carbon	1KΩ	1/5W
R94	11190224	Carbon	220KΩ	1/5W
R95	11190474	Carbon	470KΩ	1/5W
R96	11190224	Carbon	220KΩ	1/5W
R97	11190223	Carbon	22KΩ	1/5W
R901	*13257188	Variable	100KΩ	
R902	*13257187	Variable	50KΩ	
R903	*13257186	Variable	20KΩ	
R904	*13257181	Variable	500Ω	
R905	*13257185	Variable	10KΩ	
R906	*13257188	Variable	100KΩ	
R907	*13257188	Variable	100KΩ	
R908	*13257181	Variable	500Ω	
R909	*13257188	Variable	100KΩ	
R910	*13257287	Variable	100KΩ	
RA1	*13497774	Resistor Array	220KΩx4	
RA2	*13497774	Resistor Array	220KΩx4	
– Miscellaneous –				
TP0-TP13	13189150	Test Point		
J1, J2	13122358	Connector 3P		
L1-L4	*14723477	Coil, Choke	100mH	
P1, P2	13122427	Socket, Short		
P100	13123334	Connector 64P		
	1627118474	Plate, Name		
	1678789500	Card Puller		
	16353540	Pin	1.5 x 8	

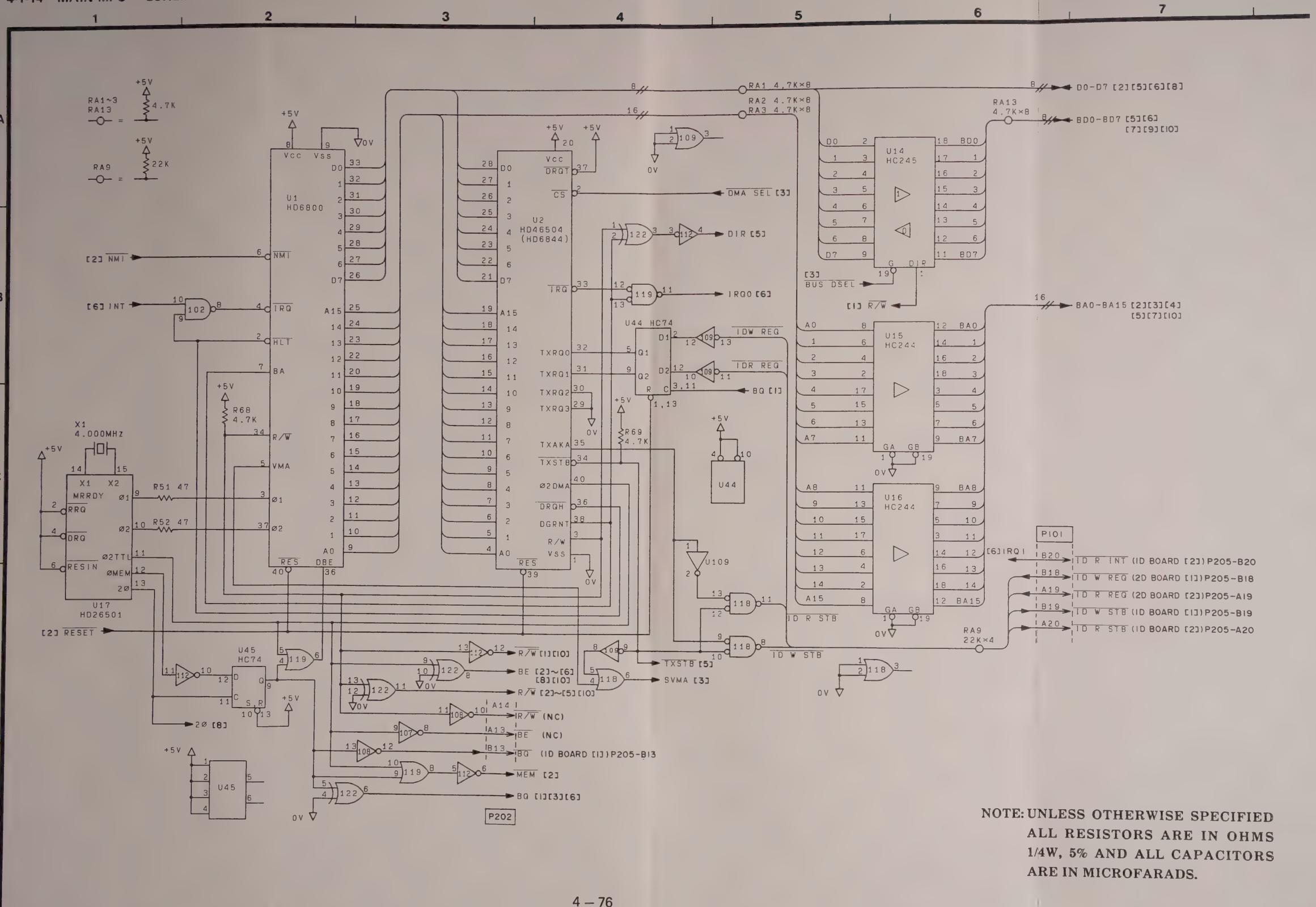

NOTE: UNLESS OTHERWISE SPECIFIED ALL RESISTORS ARE IN OHMS 1/4W, 5% AND ALL CAPACITORS ARE IN MICROFARADS.

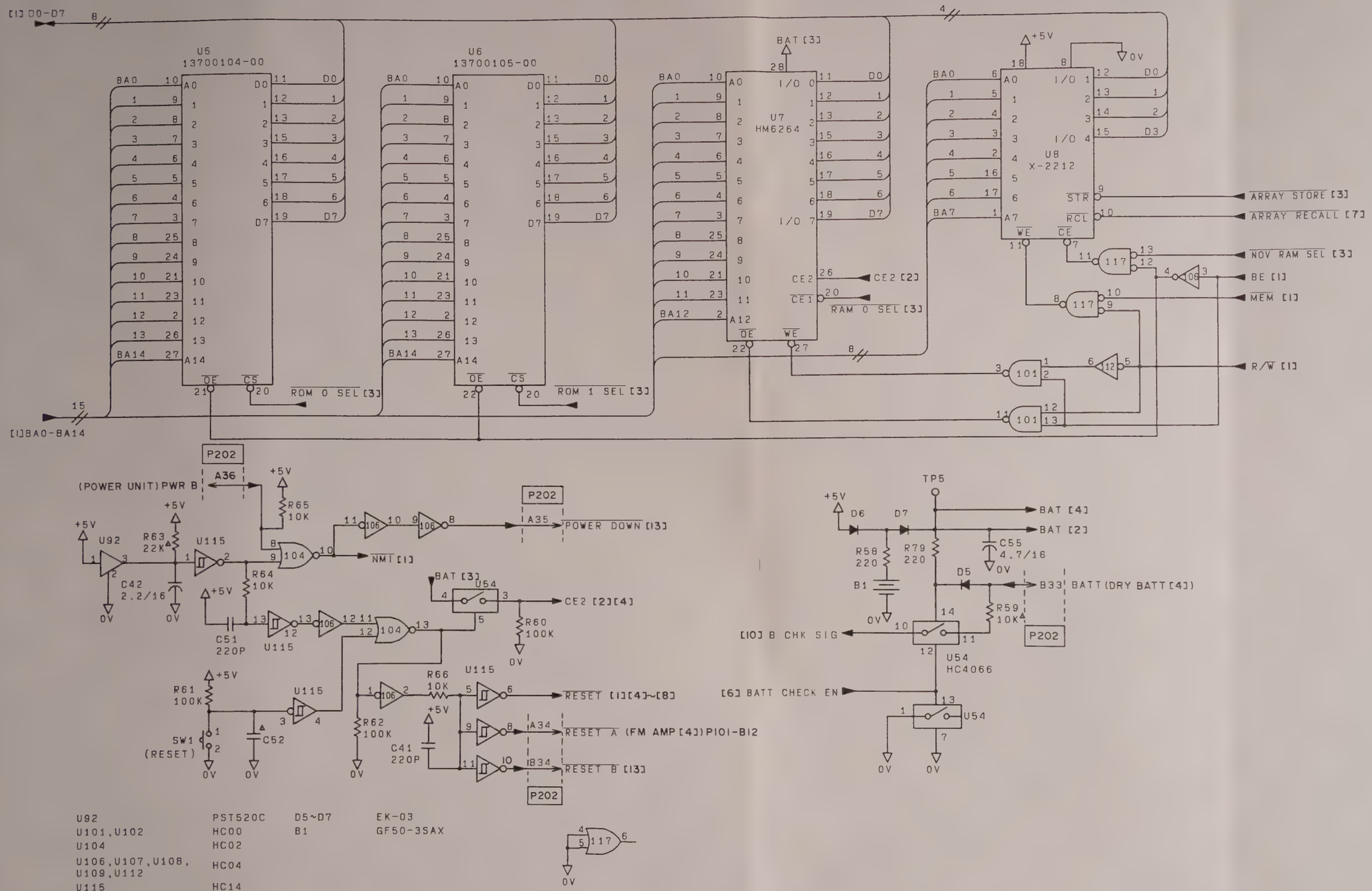

U92	PST520C	D5~D7	EK-03
U101,U102	HC00	B1	GF50-3SAX
U104	HC02		
U106,U107,U108, U109,U112	HC04		
U115	HC14		
U117,U118,U119	HC32		
U122	HC86		

NOTE: UNLESS OTHERWISE SPECIFIED ALL RESISTORS ARE IN OHMS 1/4W, 5% AND ALL CAPACITORS ARE IN MICROFARADS.

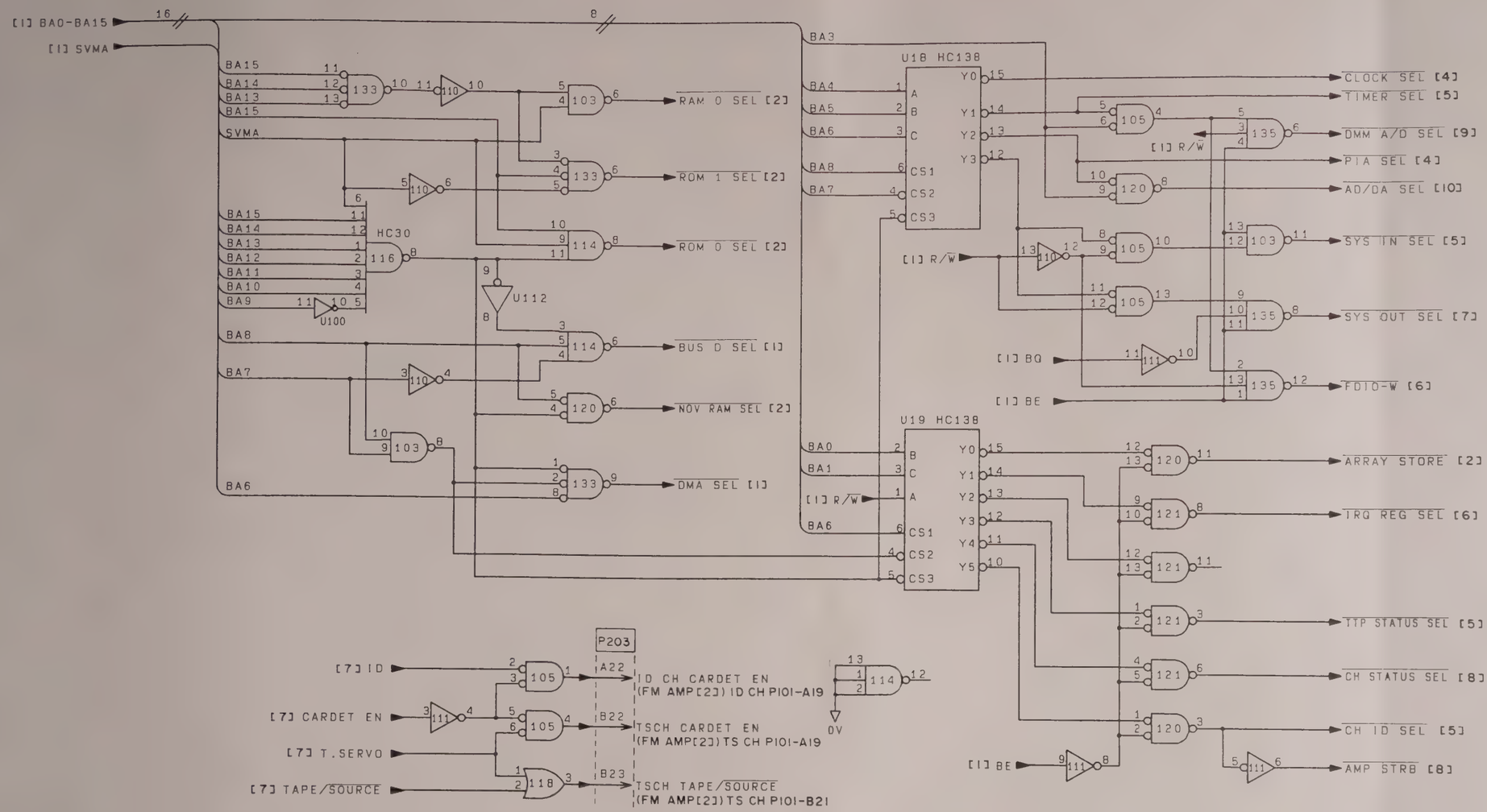

U103	HC00
U105	HC02
U100,U110,U111,U112	HC04
U114,U135	HC10
U116	HC30
U118,U120,U121	HC32
U133	HC407

NOTE: UNLESS OTHERWISE SPECIFIED ALL RESISTORS ARE IN OHMS 1/4W, 5% AND ALL CAPACITORS ARE IN MICROFARADS.

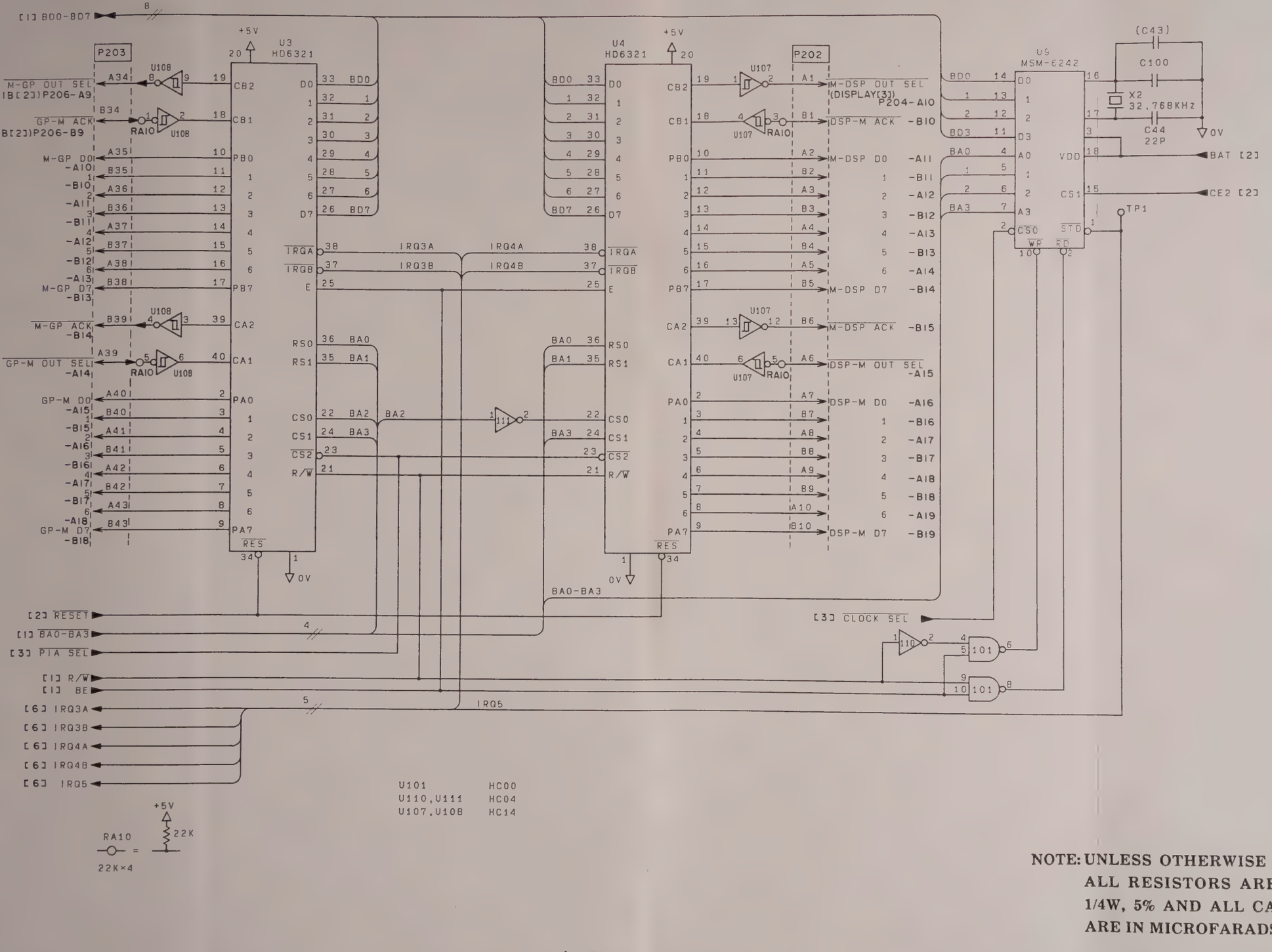

NOTE: UNLESS OTHERWISE SPECIFIED ALL RESISTORS ARE IN OHMS 1/4W, 5% AND ALL CAPACITORS ARE IN MICROFARADS.

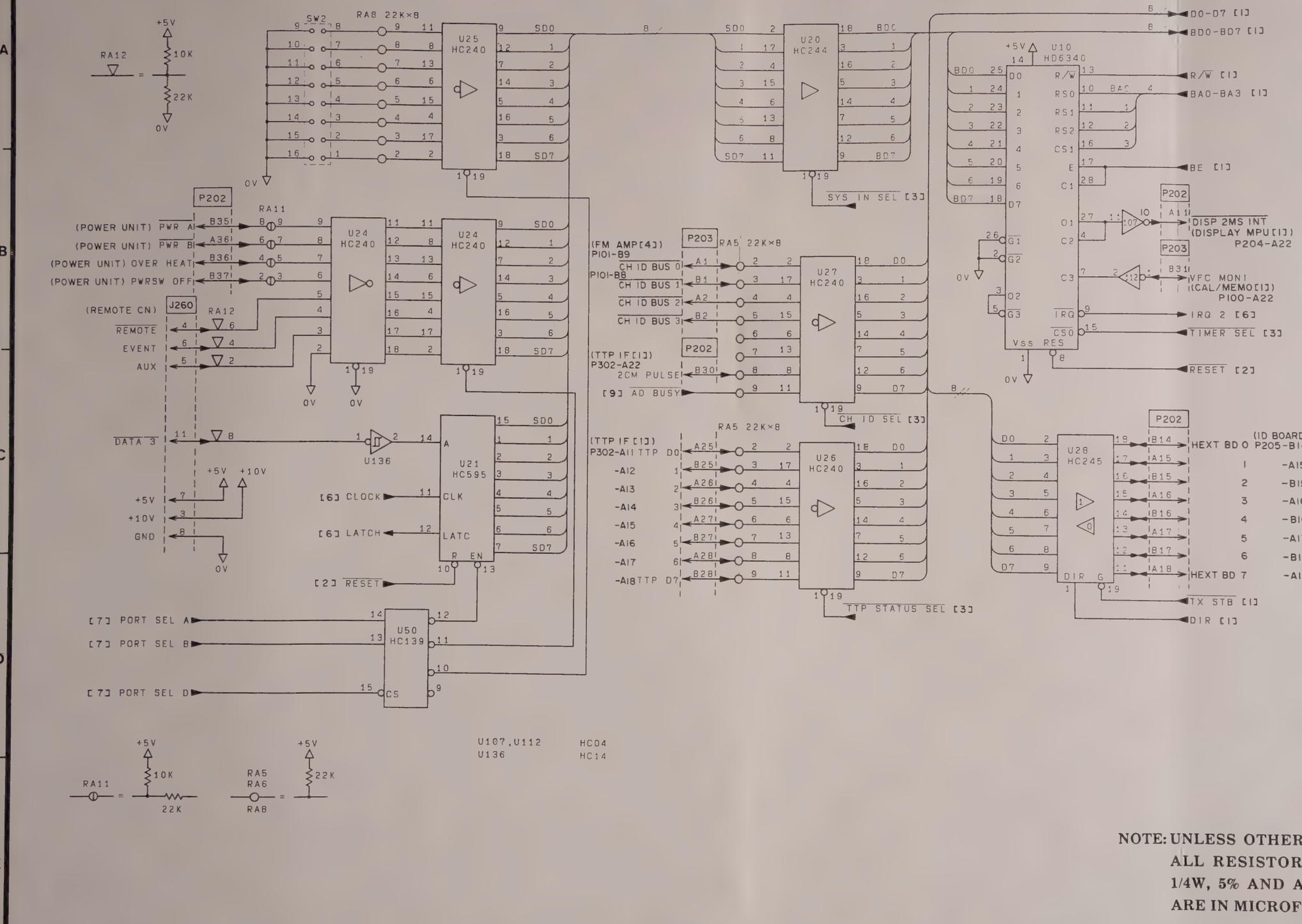

NOTE: UNLESS OTHERWISE SPECIFIED ALL RESISTORS ARE IN OHMS 1/4W, 5% AND ALL CAPACITORS ARE IN MICROFARADS.

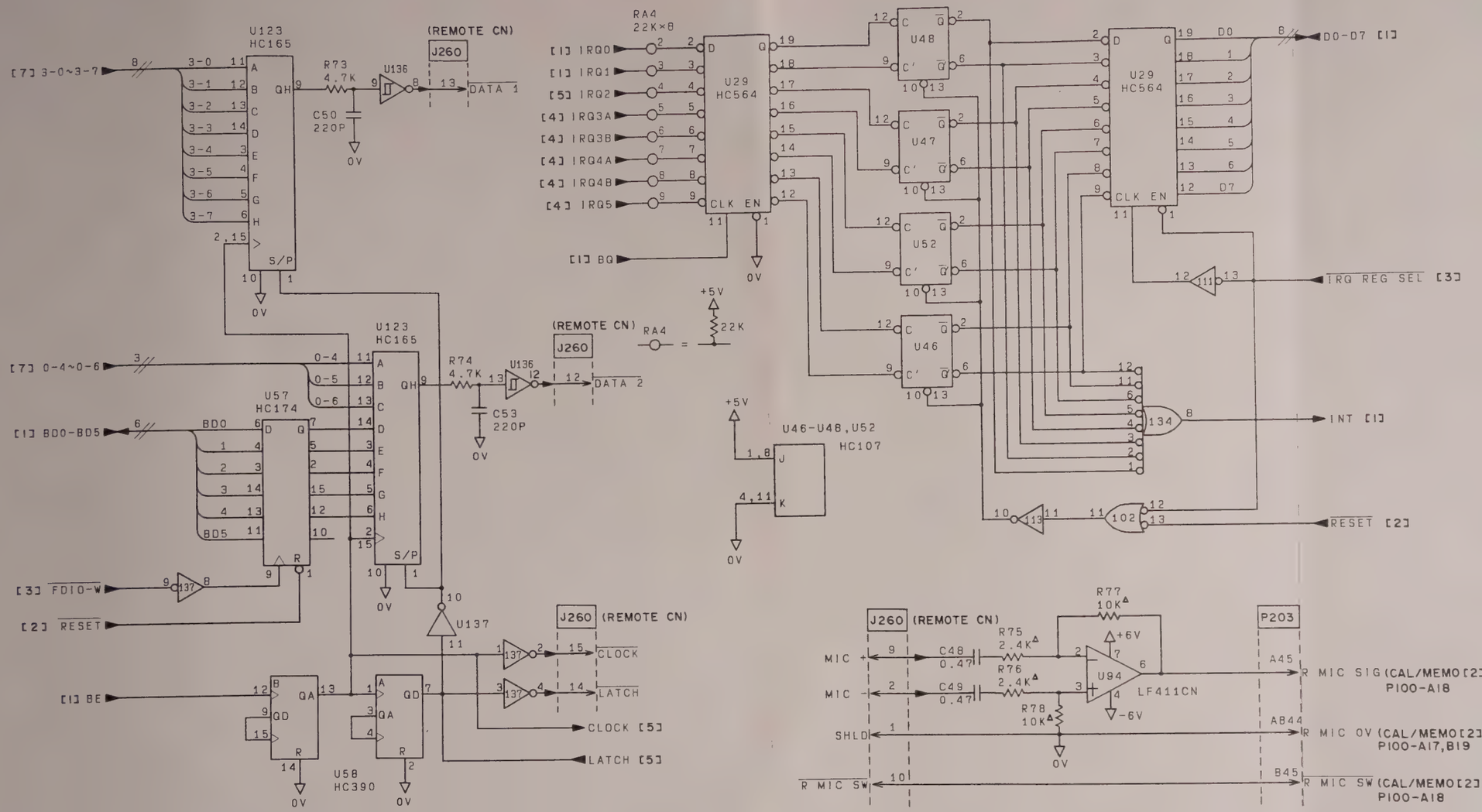

NOTE: UNLESS OTHERWISE SPECIFIED ALL RESISTORS ARE IN OHMS 1/4W, 5% AND ALL CAPACITORS ARE IN MICROFARADS.

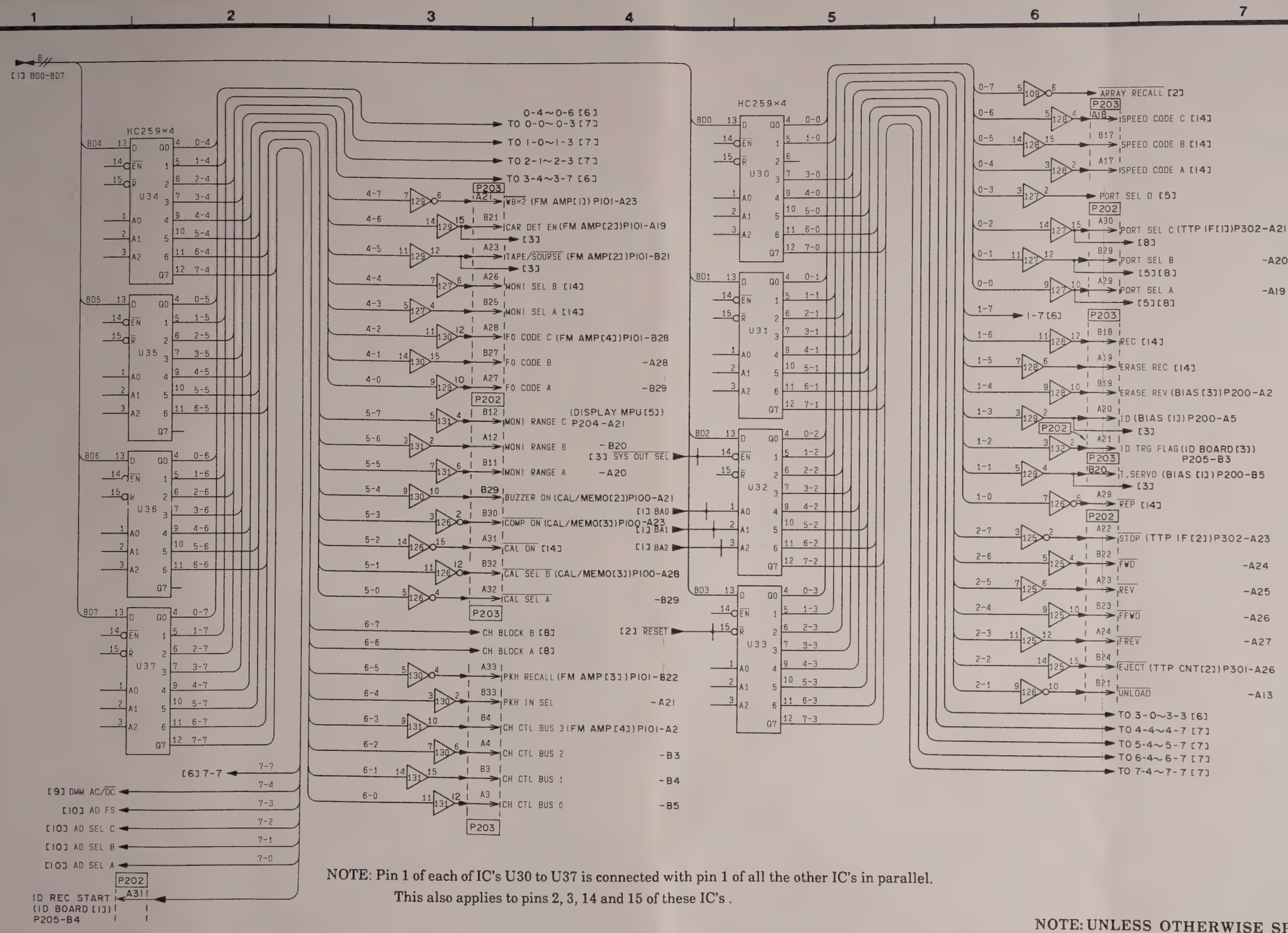

NOTE: Pin 1 of each of IC's U30 to U37 is connected with pin 1 of all the other IC's in parallel.
This also applies to pins 2, 3, 14 and 15 of these IC's .

NOTE: UNLESS OTHERWISE SPECIFIED ALL RESISTORS ARE IN OHMS 1/4W, 5% AND ALL CAPACITORS ARE IN MICROFARADS.

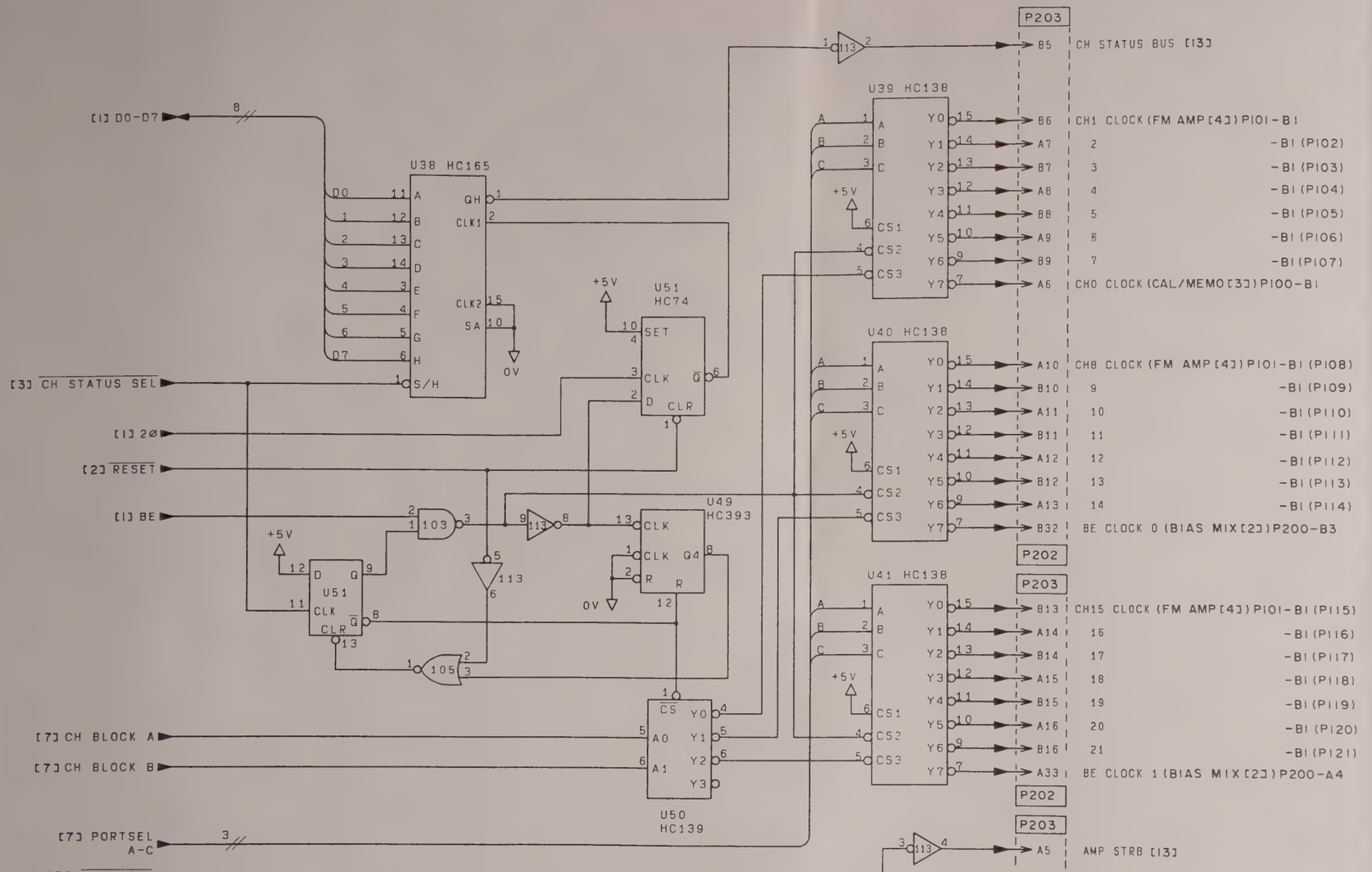

U103 HC00
U105 HC02
U113 HC04

NOTE: UNLESS OTHERWISE SPECIFIED ALL RESISTORS ARE IN OHMS 1/4W, 5% AND ALL CAPACITORS ARE IN MICROFARADS.

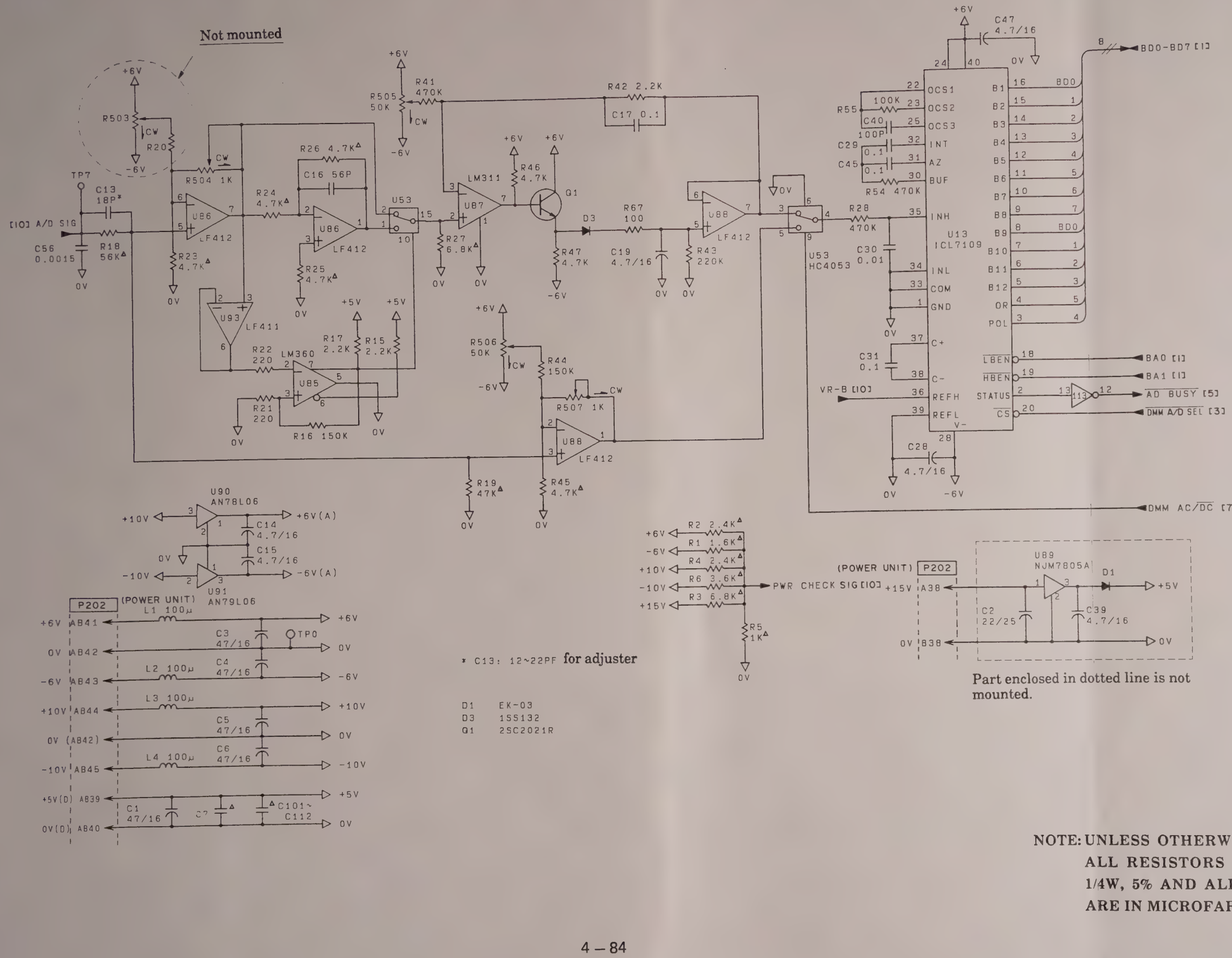

* C13: 12~22PF for adjuster

D1 EK-03
D3 1SS132
Q1 2SC2021R

Part enclosed in dotted line is not mounted.

NOTE: UNLESS OTHERWISE SPECIFIED ALL RESISTORS ARE IN OHMS 1/4W, 5% AND ALL CAPACITORS ARE IN MICROFARADS.

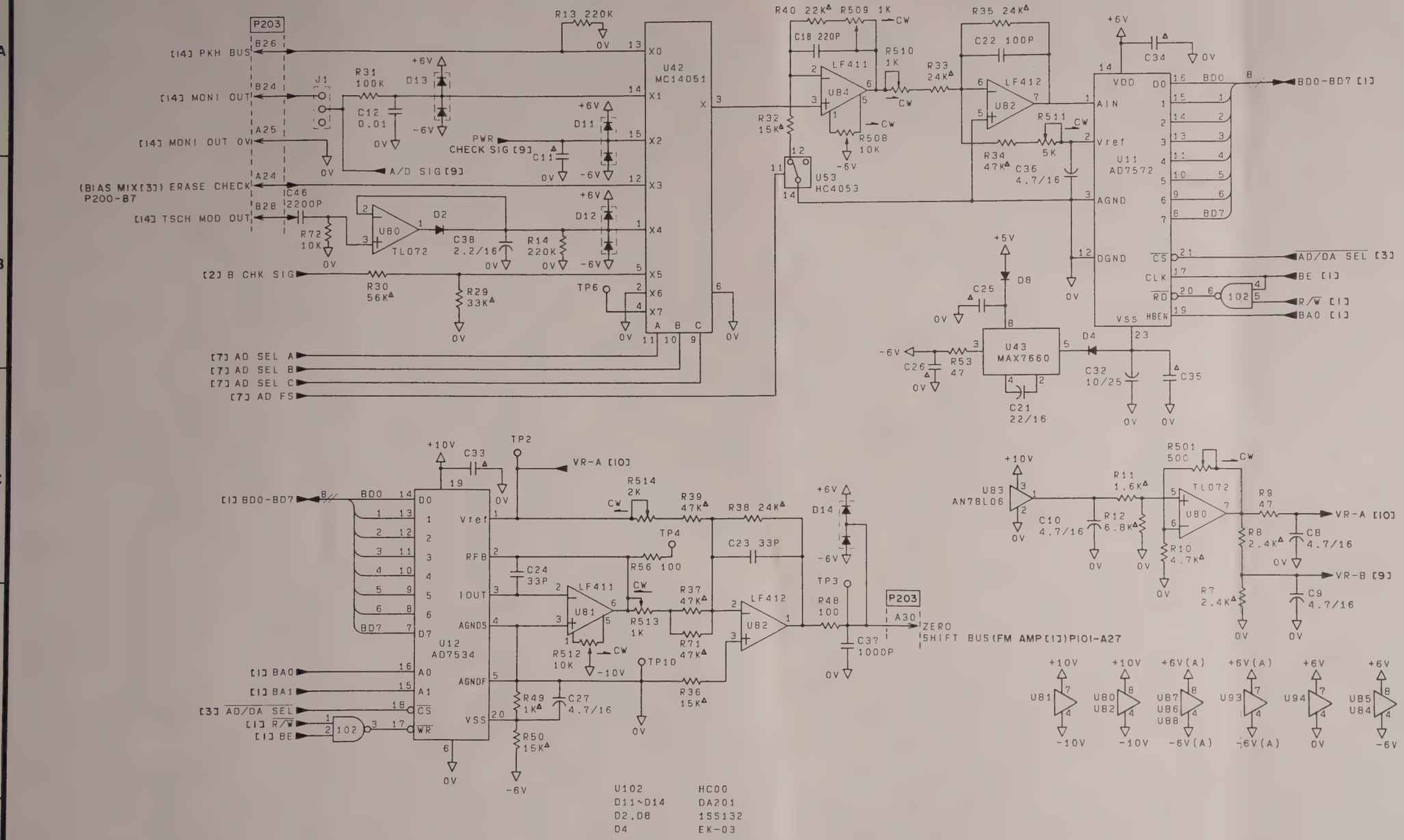

NOTE: UNLESS OTHERWISE SPECIFIED ALL RESISTORS ARE IN OHMS 1/4W, 5% AND ALL CAPACITORS ARE IN MICROFARADS.

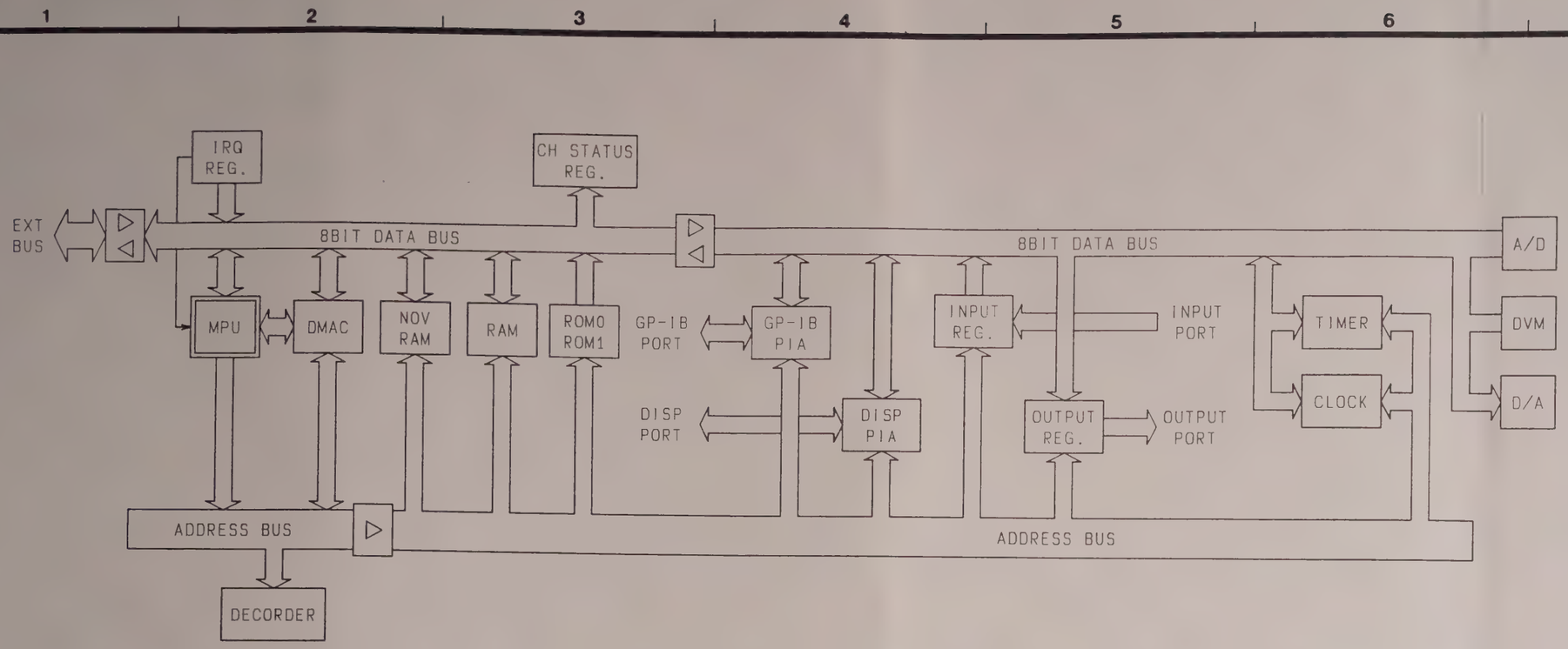

- Supply voltage and ground connections -

(Unless otherwise stated in the drawing)

VCC (+ 5V)	GND (0V)	IC's
14	7	U44 to U49, U51, U56 U101 to U122, U133 to U137
16	8	U17, U18, U19, U21 U30 to U41, U50, U57, U58 U123, U124
1	8	U125 to U132
20	10	U14 to U16, U20 U23 to U29, U55

NOTE: 1. The rating of all resistors is RD, 1/4W, 5% unless otherwise specified. The rating of resistors marked △ is RN, 1/4 W, 1%.

2. Capacitance is in μF unless otherwise stated. The character P stands for PF. The rating of capacitor marked △ is CC 0.01μF, also string of digits, 4.7/16, stands for 16V, 4.7μF.
3. The IC designation HC×× stands for 74HC××.
4. Numbers enclosed in square brackets are page numbers of drawings where the source or destinations of signals are shown.

MAIN MPU WIRING DIAGRAMS [12]

P202	Signal Name	P204 DISPLAY MPU	P205 ID BOARD	P206 GP-IB	P200 BIAS MIX	P101 FM/DR AMP	P100 CAL/ MEMO	
A1	M-DSP OUTSEL [4]	A10 [3]						
B1	DSP-M ACK [4]	B10 [3]						
A2	M-DSP D0 [4]	A11 [3]						
B2	M-DSP D1 [4]	B11 [3]						
A3	M-DSP D2 [4]	A12 [3]						
B3	M-DSP D3 [4]	B12 [3]						
A4	M-DSP D4 [4]	A13 [3]						
B4	M-DSP D5 [4]	B13 [3]						
A5	M-DSP D6 [4]	A14 [3]						
B5	M-DSP D7 [4]	B14 [3]						
A6	DSP-M OUTSEL [4]	A15 [3]						
B6	M-DSP ACK [4]	B15 [3]						
A7	DSP-M D0 [4]	A16 [3]						
B7	DSP-M D1 [4]	B16 [3]						
A8	DSP-M D2 [4]	A17 [3]						
B8	DSP-M D3 [4]	B17 [3]						
A9	DSP-M D4 [4]	A18 [3]						
B9	DSP-M D5 [4]	B18 [3]						
A10	DSP-M D6 [4]	A19 [3]						
B10	DSP-M D7 [4]	B19 [3]						
A11	DSP 2MS INT [5]	A22 [1]						
B11	MON RANGE A [7]	A20 [5]						
A12	MON RANGE B [7]	B20 [5]						
B12	MON RANGE C [7]	A21 [5]						
A13	BE [1] <NC>							
B13	BQ [1]		B13 [1]					
A14	BR/W [1] <NC>							
B14	MEXT BD0 [5]		B14 [1]					
A15	MEXT BD1 [5]		A15 [1]					
B15	MEXT BD2 [5]		B15 [1]					

P202	Signal Name	P204 DISPLAY MPU	P205 ID BOARD	P206 GP-IB	P200 BIAS MIX		P301 TTP CONT	P302 TTP IF
A16	MEXT BD3 [5]		A16 [1]					
B16	MEXT BD4 [5]		B16 [1]					
A17	MEXT BD5 [5]		A17 [1]					
B17	MEXT BD6 [5]		B17 [1]					
A18	MEXT BD7 [5]		A18 [1]					
B18	IDW REQ [1]		B18 [1]					
A19	IDR REQ [1]		A19 [2]					
B19	IDW STRB [1]		B19 [1]					
A20	IDR STRB [1]		A20 [2]					
B20	IDR INT [1]		B20 [2]					
A21	ID TRG FLAG [7]		B3 [3]					
B21	UNLOAD [7]						A13 [2]	
A22	STOP [7]							A23 [2]
B22	FWD [7]							A24 [2]
A23	REV [7]							A25 [2]
B23	F FWD [7]							A26 [2]
A24	F REV [7]							A27 [2]
B24	EJECT [7]						A26 [2]	
A25	TTP D0 [5]							A11 [1]
B25	TTP D1 [5]							A12 [1]
A26	TTP D2 [5]							A13 [1]
B26	TTP D3 [5]							A14 [1]
A27	TTP D4 [5]							A15 [1]
B27	TTP D5 [5]							A16 [1]
A28	TTP D6 [5]							A17 [1]
B28	TTP D7 [5]							A18 [1]
A29	PORT SEL A [7]							A19 [1]
B29	PORT SEL B [7]							A20 [1]
A30	PORT SEL C [7]							A21 [1]
B30	2CM PULSE [5]							A22 [1]

P202	Signal Name	P204 DISPLAY MPU	P205 ID BOARD	P206 GP-IB	P200 BIAS MIX	P101 FM/DR AMP	TTP DRV	P302 TTP I/F
A31	ID REC START [7]		B4 [1]					
B31	*							
A32	*							
B32	BE CLOCK 0 [8]				B3 [2]			
A33	BE CLOCK 1 [8]				A4 [2]			
B33	BATT [2]							
A34	RESET A [2]					B12 [4]		
B34	RESET B [2]	A24 [2]	B12 [2]	A8 [1]				A10 [2]
A35	POWER DOWN [2]	B24 [1]					A20 [1]	
B35	PWR A [5]							
A36	PWR B [2, 5]							
B36	OVER HEAT [5]							
A37	POWER OFF EN							
B37	PWR SW OFF [5]							
A38	+15V [9]							
B38	0V [9]							
A39	+5V [9]							
B39	+5V [9]							
A40	0V [9]							
B40	0V [9]							POWER UNIT
A41	+6V [9]							
B41	+6V [9]							
A42	0V [9]							
B42	0V [9]							
A43	−6V [9]							
B43	−6V [9]							
A44	+10V [9]							
B44	+10V [9]							
A45	−10V [9]							
B45	−10V [9]							

P203	Signal Name	P204 DISPLAY MPU	P205 ID BOARD	P206 GP-IB	P200 BIAS MIX	P101 FM/DR AMP	P100 CAL/ MEMO	
A1	CH ID BUS 0 [5]					B9 [4]		
B1	CH ID BUS 1 [5]					B8 [4]		
A2	CH ID BUS 2 [5]							
B2	CH ID BUS 3 [5]							
A3	CH CTL BUS 0 [7]					B5 [4]		
B3	CH CTL BUS 1 [7]					B4 [4]		
A4	CH CTL BUS 2 [7]					B3 [4]		
B4	CH CTL BUS 3 [7]					A2 [4]		
A5	AMP STRB [8]				A3 [2]	B2 [4]	B2 [3]	
B5	CH STATUS BUS [8]				B2 [2]	A1 [4]	A1 [3]	
A6	CH 0 CLOCK [8]						B1 [3]	
B6	CH 1 CLOCK [8]					[4]		
A7	CH 2 CLOCK [8]					[4]		
B7	CH 3 CLOCK [8]					[4]		
A8	CH 4 CLOCK [8]					[4]		
B8	CH 5 CLOCK [8]					[4]		
A9	CH 6 CLOCK [8]					[4]		
B9	CH 7 CLOCK [8]					[4]		
A10	CH 8 CLOCK [8]					[4]		
B10	CH 9 CLOCK [8]					[4]		
A11	CH 10 CLOCK [8]					[4]		
B11	CH 11 CLOCK [8]					[4]		
A12	CH 12 CLOCK [8]					[4]		
B12	CH 13 CLOCK [8]					[4]		
A13	CH 14 CLOCK [8]					[4]		
B13	CH 15 CLOCK [8]					[4]		
A14	CH 16 CLOCK [8]					[4]		
B14	CH 17 CLOCK [8]					[4]		
A15	CH 18 CLOCK [8]					[4]		
B15	CH 19 CLOCK [8]					[4]		

P203	Signal Name	P204 DISPLAY MPU	P205 ID BOARD	P206 GP-IB	P200 BIAS MIX	P101 FM/DR AMP	P100 CAL/ MEMO	P301 TTP CONT	P302 TTP IF
A16	CH 20 CLOCK [8]					CH20-B1 [4]			
B16	CH 21 CLOCK [8]					CH21-B1 [4]			
A17	SPEED CODE A [7]		A6 [1]			B27 [2]		A28 [1]	
B17	SPEED CODE B [7]		B6 [1]			A26 [2]	B27 [3]	A29 [1]	
A18	SPEED CODE C [7]		A7 [1]			B26 [2]	A26 [3]	A30 [1]	
B18	REC [7]		B5 [1]		A7 [2]	A31 [1]	A31 [3]	B30 [1]	
A19	ERASE REC [7]				B1 [2]			A30 [2]	
B19	ERASE REV [7]				A2 [3]				
A20	ID [7]				A5 [1]				
B20	T SERVO [7]				B5 [1]				
A21	WB X 2 [7]					A23 [1]			
B21	CAR DET EN [7]					A19 [2]			
A22	ID CH CAR DET EN [3]					ID CH-A19 [2]			
B22	TS CH CAR DET EN [3]					TS CH-A19 [2]			
A23	TAPE/SOURCE [7]					B21 [2]			
B23	TSCH TAPE/SOURCE [3]					TS CH-B21 [2]			
A24	ERASE CHECK [10]				B7 [3]				
B24	MONI OUT [10]	A25 [5]		A32 [4]			B21 [1]		
A25	MONI OUT 0V [10]	B25 [5]		B32 [4]					
B25	MONI SEL A [7]					A18 [3]	B23 [1]		
A26	MONI SEL B [7]					A17 [3]	B22 [3]		
B26	PKH BUS [10]					A22 [3]	B24 [3]		
A27	F0 CODE A [7]					B29 [4]			
B27	F0 CODE B [7]					A28 [4]			
A28	F0 CODE C [7]					B28 [4]			
B28	TSCH MOD OUT [10]					CH11-A20 [2]		A21 [1]	
A29	REP [7]					B23 [3]	A10 [2]		
B29	BUZZER ON [7]						A21 [2]		
A30	ZERO SHFT BUS [10]					A27 [1]			
B30	COMP ON [7]						A23 [3]		

P203	Signal Name	P204 DISPLAY MPU	P205 ID BOARD	P206 GP-IB	P200 BIAS MIX	P101 FM/DR AMP	P100 CAL/ MEMO	
A31	CAL ON [7]					B31 [1]	B31 [3]	
B31	VFC MON [5]						A22 [1]	
A32	CAL SEL A [7]						B29 [3]	
B32	CAL SEL B [7]						A28 [3]	
A33	PKH RECAL [7]					B22 [3]		
B33	PKH INSEL [7]					A21 [3]		
A34	M-GP OUTSEL [4]			A9 [2]				
B34	GP-M ACK [4]			B9 [2]				
A35	M-GP D0 [4]			A10 [2]				
B35	M-GP D1 [4]			B10 [2]				
A36	M-GP D2 [4]			A11 [2]				
B36	M-GP D3 [4]			B11 [2]				
A37	M-GP D4 [4]			A12 [2]				
B37	M-GP D5 [4]			B12 [2]				
A38	M-GP D6 [4]			A13 [2]				
B38	M-GP D7 [4]			B13 [2]				
A39	GP-M OUTSEL [4]			A14 [2]				
B39	M-GP ACK [4]			B14 [2]				
A40	GP-M D0 [4]			A15 [2]				
B40	GP-M D1 [4]			B15 [2]				
A41	GP-M D2 [4]			A16 [2]				
B41	GP-M D3 [4]			B16 [2]				
A42	GP-M D4 [4]			A17 [2]				
B42	GP-M D5 [4]			B17 [2]				
A43	GP-M D6 [4]			A18 [2]				
B43	GP-M D7 [4]			B18 [2]				
A44	R MIC 0V [6]						A17 [2]	
B44	R MIC 0V [6]						B19 [2]	
A45	R MIC SIG [6]						A18 [2]	
B45	R MIC SW [6]						B18 [2]	

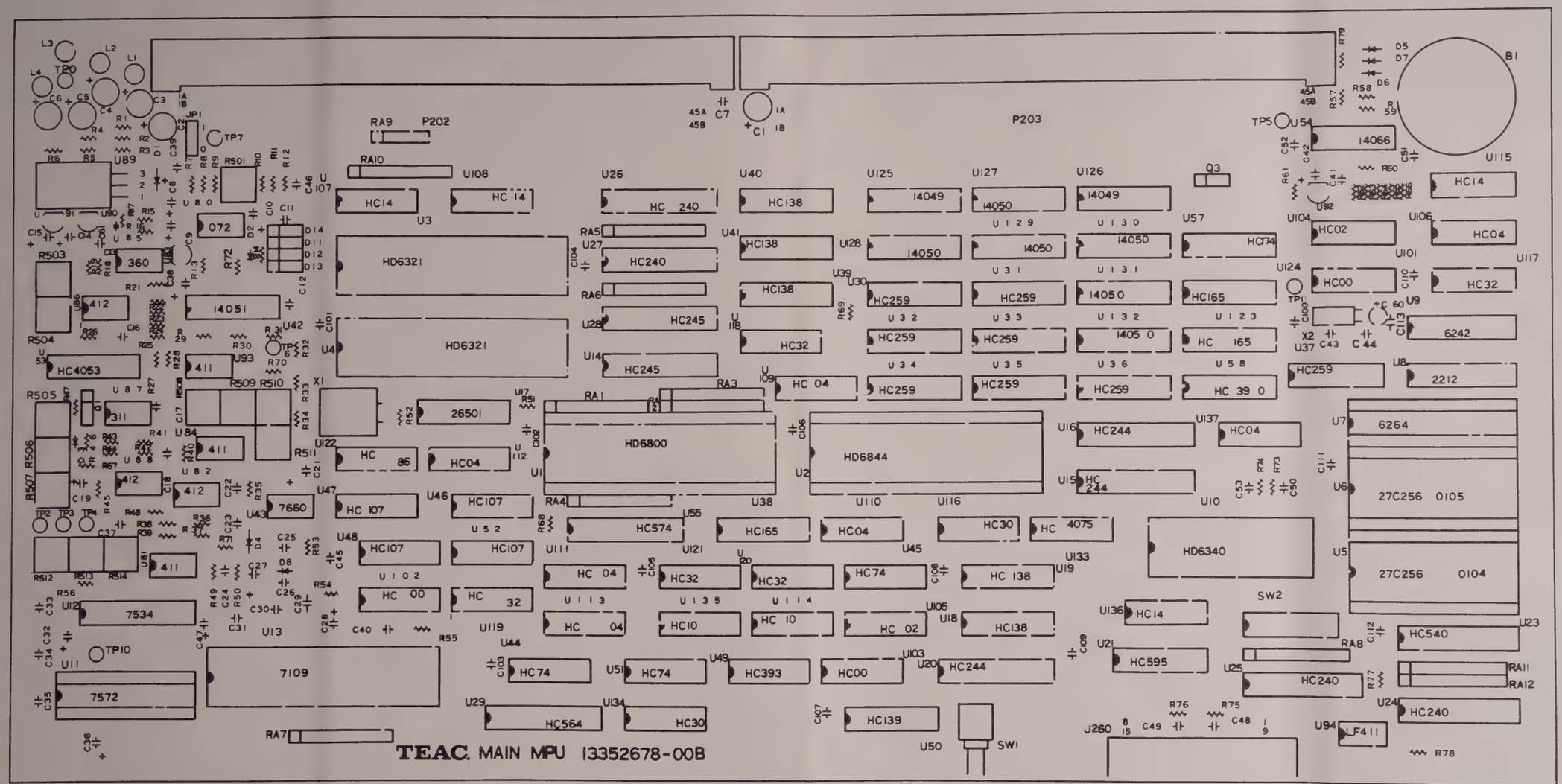
TEAC MAIN MPU 13352678-00B
P202
P203
RA9
RA10
RA5
RA6
RA1
RA2
RA3
RA4
RA7
RA8
RA11
RA12
U3
U4
U1
U2
U7
U6
U5
U23
U24
U25
U26
U27
U28
U29
U30
U31
U32
U33
U34
U35
U36
U37
U38
U40
U41
U44
U45
U46
U47
U48
U49
U50
U51
U52
U54
U55
U57
U58
U59
U60
U61
U84
U85
U87
U89
U90
U91
U92
U93
U94
U101
U102
U103
U104
U105
U106
U107
U108
U109
U110
U111
U112
U113
U114
U115
U116
U117
U118
U119
U120
U121
U122
U123
U124
U125
U126
U127
U128
U129
U130
U131
U132
U133
U134
U135
U136
U137
U139
U10
U11
U12
U13
U21
U22
U43
SW1
SW2
X1
X2
B1
Q3
TP0
TP1
TP2
TP3
TP4
TP5
TP6
TP7
TP10
JP1
J260
HD6321
HD6800
HD6844
HD6340
HC14
HC 14
HC 240
HC240
HC138
HC245
HC32
HC 04
HC259
14049
14050
14066
HC74
HC165
HC 165
HC 39 0
HC259
HC02
HC04
HC00
HC32
6242
2212
6264
27C256 0105
27C256 0104
HC540
HC595
HC240
HC244
HC 244
HC 86
HC04
HC574
HC165
HC04
HC30
HC 4075
HC 04
HC32
HC74
HC 138
HC 00
HC 32
HC 04
HC10
HC 10
HC 02
HC138
HC14
HC 107
HC107
HC107
HC4053
7534
7109
7572
LF411
7660
26501
072
360
14051
412
411
311
R503
R504
R505
R506
R507
R509
R510
R511
R512
R513
R514
R501
R502
R79
R58
R57
R60
R61
R72
R70
R69
R68
R54
R55
R56
R74
R73
R76
R75
R78
C107
C108
C109
C110
C111
C112
C113
C100
C101
C102
C103
C104
C105
C106
C42
C51
C52
C41
C43
C44
C50
C53
C49
C48
C46
C47
C59
C60
D5
D7
D6
D1
D2
D4
D8
D11
D12
D13
D14
L1
L2
L3
L4
C1
C3
C4
C5
C6
C7
C9
C10
C11
C12
C13
C15
C16
C17
C18
C19
C21
C22
C23
C24
C25
C26
C27
C28
C29
C30
C31
C32
C33
C34
C35
C36
C37
C39
C40
C45
R1
R2
R3
R4
R5
R6
R7
R8
R9
R10
R11
R12
R13
R15
R16
R17
R18
R21
R22
R23
R24
R25
R26
R27
R28
R29
R30
R31
R32
R33
R34
R35
R36
R37
R38
R39
R41
R43
R44
R45
R46
R47
R48
R49
R50
R52
R53
R67
R71
R77
R78
1A
1B
45A
45B

PARTS LIST – MAIN MPU –

Ref. No.	Part No.	Description	
	1555267800	Main MPU PCBA	
– ICs –			
U1	*13441947	IC	HD6800P
U2	*13441620	IC	HD46504
U3	*13443054	IC	HD6321P
U4	*13443054	IC	HD6321P
U7	*13443067	IC	HM6264ALSP-15
U8	*13443078	IC	X-2212
U9	*13442601	IC	MSM6242RS
U10	*13443060	IC	HD6340P
U11	*13443032	IC	AD7572JN12
U12	*13443041	IC	AD7534JN
U13	*13443142	IC	ICL7109CPL
U14	*13442689	IC	MC74HC245N
U15	*13442688	IC	MC74HC244N
U16	*13442688	IC	MC74HC244N
U17	*13441626	IC	HD26501
U18	*13442661	IC	MC74HC138N
U19	*13442661	IC	MC74HC138N
U20	*13442688	IC	MC74HC244N
U21	*13442867	IC	MC74HC595N
U23	*13443080	IC	MC74HC540N
U24-U27	*13442152	IC	MC74HC240N
U28	*13442689	IC	MC74HC245N
U29	*13443082	IC	MC74HC564N
U30-U37	*13442693	IC	MC74HC259N
U38	*13442670	IC	MC74HC165N
U39-U41	*13442661	IC	MC74HC138N
U42	*13441441	IC	MC14051BCP
U43	*13447747	IC	ICL7660CPA
U44	*13442077	IC	MC74HC74N
U45	*13442077	IC	MC74HC74N
U46-U48	*13442652	IC	MC74HC107N
U49	*13442093	IC	MC74HC393N
U50	*13442662	IC	MC74HC139N
U51	*13442077	IC	MC74HC74N
U53	*13443145	IC	MC74HC4053N
U54	*13441399	IC	MC14066BCP
U55	*13443083	IC	MC74HC574N
U56	*13442652	IC	MC74HC107N
U57	*13442672	IC	MC74HC174N
U58	*13442709	IC	MC74HC390N
U80	*13447278	IC	TL072P
U81	*13447367	IC	LF411CN
U82	*13447373	IC	LF412CN
U83	*13447645	IC	AN78L06
U84	*13447367	IC	LF411CN
U85	*13447752	IC	LM360N
U86	*13447373	IC	LF412CN
U87	*13447239	IC	LM311N
U88	*13447373	IC	LF412CN
U90	*13447645	IC	AN78L06
U91	*13447657	IC	AN79L06
U92	*13442792	IC	PST520C
U93	*13447367	IC	LF411CN
U94	*13447367	IC	LF411CN
U101-U103	*13442078	IC	MC74HC00N
U104	*13442321	IC	MC74HC02N
U105	*13442321	IC	MC74HC02N
U106	*13442151	IC	MC74HC04N
U107	*13442641	IC	MC74HC14N
U108	*13442641	IC	MC74HC14N

Ref. No.	Part No.	Description	
U109-U113	*13442151	IC	MC74HC04N
U114	*13442639	IC	MC74HC10N
U115	*13442641	IC	MC74HC14N
U116	*13442644	IC	MC74HC30N
U117-U121	*13442645	IC	MC74HC32N
U122	*13442076	IC	MC74HC86N
U123	*13442670	IC	MC74HC165N
U124	*13442670	IC	MC74HC165N
U125	*13441383	IC	MC14049BCP
U126	*13441383	IC	MC14049BCP
U127-U132	*13441384	IC	MC14050BCP
U133	*13443084	IC	MC74HC4075N
U134	*13442644	IC	MC74HC30N
U135	*13442639	IC	MC74HC10N
U136	*13442641	IC	MC74HC14N
U137	*13442151	IC	MC74HC04N
– Transistor –			
Q1	*13424286	Transistor	2SC2021-R
Q3	*13428189	Transistor Array	DTC114YF
– Diodes –			
D2	*13411383	Diode	1SS132
D3	*13411383	Diode	1SS132
D4-D7	*13411473	Diode	EK03
D8	*13411383	Diode	1SS132
D11-D14	*13411405	Diode	DA203
– Capacitors –			
C1	12902015	Electrolytic	47μF 16V
C3-C6	12902015	Electrolytic	47μF 16V
C7	12901325	Ceramic	0.01μF 63V
C8-C10	12901469	Tantalum	4.7μF 16V
C11	12901325	Ceramic	0.01μF 63V
C12	12904041	Metallized	0.01μF 50V
C13	12900444	Ceramic	18pF 100V
C14	12901469	Tantalum	4.7μF 16V
C15	12901469	Tantalum	4.7μF 16V
C16	12900450	Ceramic	56pF 100V
C17	12904024	Metallized	0.1μF 50V
C18	12901281	Ceramic	220pF 100V
C19	12901469	Tantalum	4.7μF 16V
C21	12901473	Tantalum	22μF 16V
C22	12900453	Ceramic	100pF 100V
C23	12900447	Ceramic	33pF 100V
C24	12900447	Ceramic	33pF 100V
C25	12901325	Ceramic	0.01μF 63V
C26	12901325	Ceramic	0.01μF 63V
C27	12901469	Tantalum	4.7μF 16V
C28	12901469	Tantalum	4.7μF 16V
C29	12904024	Metallized	0.1μF 50V
C30	12904041	Metallized	0.01μF 50V
C31	12904024	Metallized	0.1μF 50V
C32	12901489	Tantalum	10μF 25V
C33-C35	12901325	Ceramic	0.01μF 63V
C36	12901469	Tantalum	4.7μF 16V
C37	12901295	Ceramic	1000pF 100V
C38	12901467	Tantalum	2.2μF 16V
C40	12900453	Ceramic	100pF 100V
C41	12901281	Ceramic	220pF 100V
C42	12901467	Tantalum	4.7μF 16V
C44	12900445	Ceramic	22pF 100V
C45	12904024	Metallized	0.1μF 50V
C46	12901299	Ceramic	2200pF 100V

Ref. No.	Part No.	Description		
C47	12901469	Tantalum	4.7μF	16V
C48	12388474	Ceramic	0.47μF	50V
C49	12388474	Ceramic	0.47μF	50V
C50	12901287	Ceramic	220pF	100V
C51	12901287	Ceramic	220pF	100V
C52	12901325	Ceramic	0.01μF	63V
C53	12901281	Ceramic	220pF	100V
C55	12901469	Tantalum	4.7μF	16V
C56	12904031	Metallized	1500pF	50V
C100	12899042	Trimer		
C101-C112	12901325	Ceramic	0.01μF	63V
– Resistors –				
R1	11066162	Metal Film	1.6KΩ	1/5W
R2	11066242	Metal Film	2.4KΩ	1/5W
R3	11066682	Metal Film	6.8KΩ	1/5W
R4	11066242	Metal Film	2.4KΩ	1/5W
R5	11066102	Metal Film	1KΩ	1/5W
R6	11066362	Metal Film	3.6KΩ	1/5W
R7	11066242	Metal Film	2.4KΩ	1/5W
R8	11066242	Metal Film	2.4KΩ	1/5W
R9	11173470	Carbon	47Ω	¼W
R10	11066472	Metal Film	4.7KΩ	1/5W
R11	11066162	Metal Film	1.6KΩ	1/5W
R12	11066682	Metal Film	6.8KΩ	1/5W
R13	11173224	Carbon	220KΩ	¼W
R14	11173224	Carbon	220KΩ	¼W
R15	11173222	Carbon	2.2KΩ	¼W
R16	11173154	Carbon	150KΩ	¼W
R17	11173222	Carbon	2.2KΩ	¼W
R18	11066563	Metal Film	56KΩ	1/5W
R19	11066473	Metal Film	47KΩ	1/5W
R21	11173221	Carbon	220Ω	¼W
R22	11173221	Carbon	220Ω	¼W
R23-R26	11066472	Metal Film	4.7KΩ	1/5W
R27	11066682	Metal Film	6.8KΩ	1/5W
R28	11173474	Carbon	470KΩ	¼W
R29	11066333	Metal Film	33KΩ	1/5W
R30	11066563	Metal Film	56KΩ	1/5W
R31	11173104	Carbon	100KΩ	¼W
R32	11066153	Metal Film	15KΩ	1/5W
R33	11066243	Metal Film	24KΩ	1/5W
R34	11066473	Metal Film	47KΩ	1/5W
R35	11066243	Metal Film	24KΩ	1/5W
R36	11066153	Metal Film	15KΩ	1/5W
R37	11066473	Metal Film	47KΩ	1/5W
R38	11066243	Metal Film	24KΩ	1/5W
R39	11066473	Metal Film	47KΩ	1/5W
R40	11066223	Metal Film	22KΩ	1/5W
R41	11173474	Carbon	470KΩ	¼W
R42	11173222	Carbon	2.2KΩ	¼W
R43	11173224	Carbon	220KΩ	¼W
R44	11173154	Carbon	150KΩ	¼W
R45	11066472	Metal Film	4.7KΩ	1/5W
R46	11173472	Carbon	4.7KΩ	¼W
R47	11173472	Carbon	4.7KΩ	¼W
R48	11173101	Carbon	100Ω	¼W
R49	11066102	Metal Film	1KΩ	1/5W
R50	11066153	Metal Film	15KΩ	1/5W
R51	11173470	Carbon	47Ω	¼W
R52	11173470	Carbon	47Ω	¼W
R53	11173470	Carbon	47Ω	¼W
R54	11173474	Carbon	470KΩ	¼W
R55	11173104	Carbon	100KΩ	¼W
R56	11173101	Carbon	100Ω	¼W
R57	11173101	Carbon	100Ω	¼W
R58	11173221	Carbon	220Ω	¼W
R59	11066103	Metal Film	10KΩ	1/5W

Ref. No.	Part No.	Description		
R60	11173104	Carbon	100KΩ	¼W
R61	11173104	Carbon	100KΩ	¼W
R62	11173104	Carbon	100KΩ	¼W
R63	11066223	Metal Film	22KΩ	1/5W
R64	11173103	Carbon	10KΩ	¼W
R65	11173103	Carbon	10KΩ	¼W
R66	11173103	Carbon	10KΩ	¼W
R68	11173472	Carbon	4.7KΩ	¼W
R69	11173103	Carbon	10KΩ	¼W
R71	11066473	Metal Film	47KΩ	1/5W
R72	11173103	Carbon	10KΩ	¼W
R73	11173472	Carbon	4.7KΩ	¼W
R74	11173472	Carbon	4.7KΩ	¼W
R75	11066242	Metal Film	2.4KΩ	1/5W
R76	11066242	Metal Film	2.4KΩ	1/5W
R77	11066103	Metal Film	10KΩ	1/5W
R78	11066103	Metal Film	10KΩ	1/5W
R79	11173221	Carbon	220Ω	¼W
R501	*13257181	Variable	500Ω	
R504	*13257182	Variable	1KΩ	
R505	*13257187	Variable	50KΩ	
R506	*13257187	Variable	50KΩ	
R507	*13257182	Variable	1KΩ	
R508	*13257185	Variable	10KΩ	
R509	*13257182	Variable	1KΩ	
R510	*13257182	Variable	1KΩ	
R511	*13257184	Variable	5KΩ	
R512	*13257185	Variable	10KΩ	
R513	*13257182	Variable	1KΩ	
R514	*13257183	Variable	2KΩ	
RA1	*13497864	Resistor Array	4.7KΩx8	
RA2	*13497864	Resistor Array	4.7KΩx8	
RA3	*13497864	Resistor Array	4.7KΩx8	
RA4	*13497868	Resistor Array	22KΩx8	
RA5	*13497868	Resistor Array	22KΩx8	
RA6	*13497868	Resistor Array	22KΩx8	
RA7	*13497867	Resistor Array	4.7KΩx8	
RA8	*13497868	Resistor Array	22KΩx8	
RA9	*13497768	Resistor Array	22KΩx4	
RA10	*13497768	Resistor Array	22KΩx4	
RA11	*13499263	Resistor Array	10KΩ/22KΩx8	
RA12	*13499263	Resistor Array	10KΩ/22KΩx8	
– Miscellaneous –				
TP0-TP7	13189150	Test Point		
TP10	13189150	Test Point		
U1	*13299482	Socket, IC	40P (U1)	
U2	*13299482	Socket, IC	40P (U2)	
U5	*13299479	Socket, IC	28P (U5)	
U6	*13299479	Socket, IC	28P (U6)	
U11	13299477	Socket, IC	24P (U11)	
B1	*15190048	Battery	GF50-3SAX	
J1	13122358	Connector S 3P		
J260	13123319	Connector 17LE-13150-27 (D4AD)		
P1	13122427	Socket, Short		
P202	13123335	Connector 90P		
P203	13123335	Connector 90P		
L1-L4	*14723477	Coil, Choke	100μH	
SW1	*13222293	Switch, Push		
SW2	*13225405	Switch, Dip	DSS708	
X1	*13295153	OSC	4.000MHz	
X2	*13295082	OSC	32.768KHz	
	1370010400	Memory, IC	(NXR MAIN 1)	
	1370010500	Memory, IC	(NXR MAIN 2)	

4-1-15 MOIRE AMP PCBA SCHEMATIC DIAGRAM

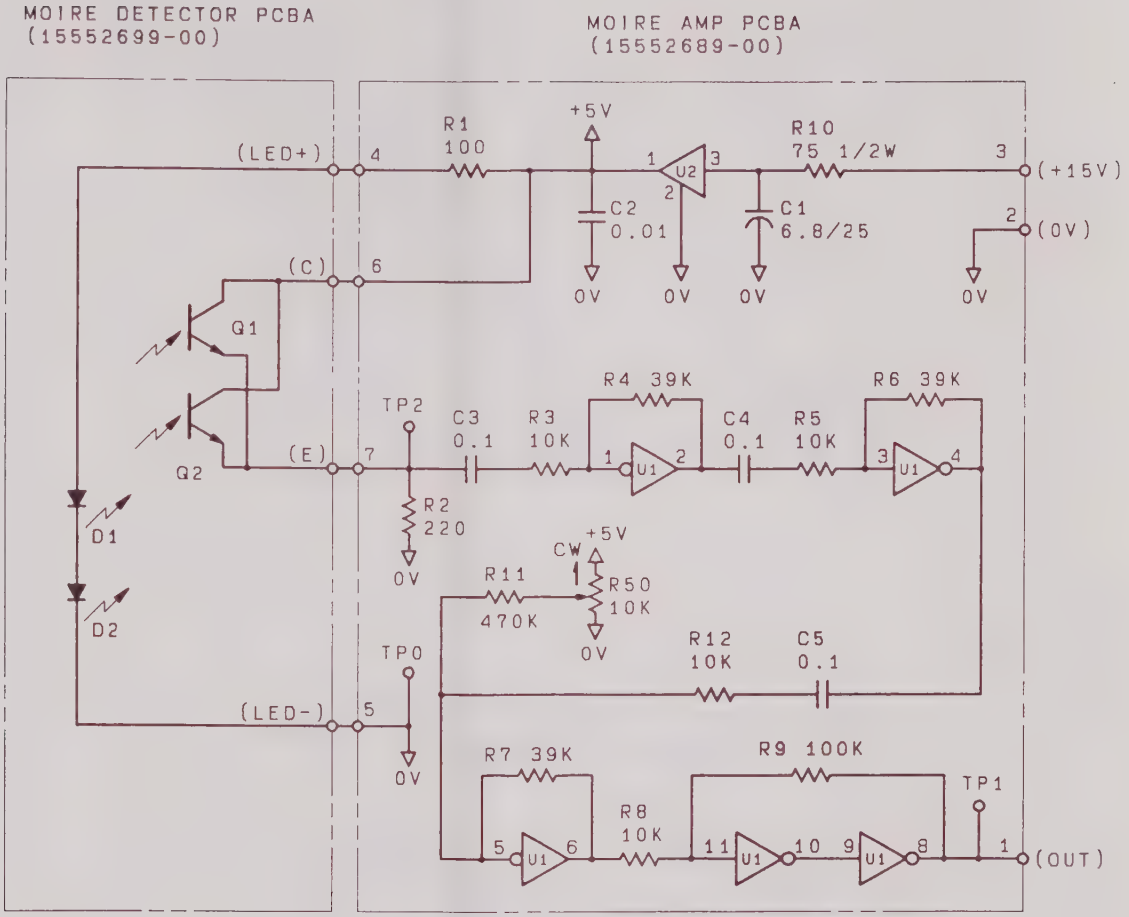

PRINTED CIRCUIT BOARD -MOIRE AMP PCBA-

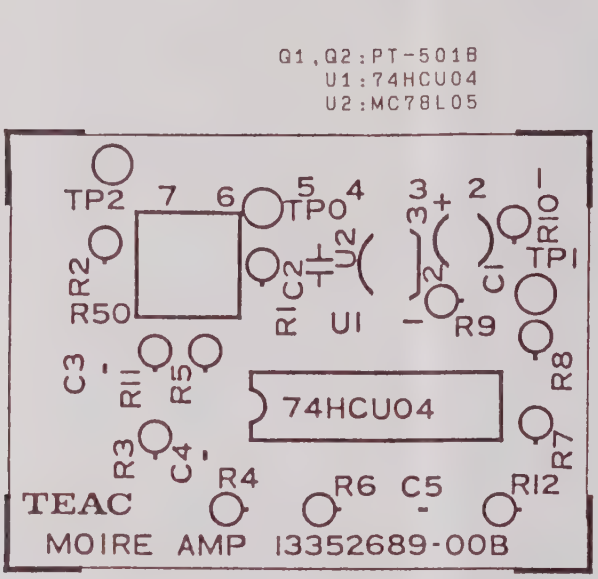

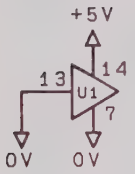

PARTS LIST

Ref. No.	Part No.	Description		
	1555268900	**Moire Amp PCBA**		
– ICs –				
U1	*13442158	IC		MC74HCU04N
U2	*13447243	IC		MC78L05APC
– Capacitors –				
C1	12901488	Tantalum	6.8μF	25V
C2	12901325	Ceramic	0.01μF	63V
C3	12388104	Ceramic	0.1μF	50V
C4	12388104	Ceramic	0.1μF	50V
C5	12388104	Ceramic	0.1μF	50V
– Resistors –				
R1	11190101	Carbon	100Ω	1/5W
R2	11190221	Carbon	220Ω	1/5W
R3	11190103	Carbon	10KΩ	1/5W
R4	11190393	Carbon	39KΩ	1/5W
R5	11190103	Carbon	10KΩ	1/5W
R6	11190393	Carbon	39KΩ	1/5W
R7	11190393	Carbon	39KΩ	1/5W
R8	11190103	Carbon	10KΩ	1/5W
R9	11190104	Carbon	100KΩ	1/5W
R10	11169750	Carbon	75Ω	½W
R11	11172474	Carbon	470KΩ	1/5W
R12	11190103	Carbon	10KΩ	1/5W
R50	*13257185	Variable	10KΩ	
– Miscellaneous –				
TP0	13189150	Test Point		
TP1	13189150	Test Point		
TP2	13189150	Test Point		
	13150412	Housing 5051-6		
	13199203	Contactor 2759GL		

4-1-16 AMP MOTHER BOARD WIRING DIAGRAM [1]

Signal	CAL/ MEMO J100	FM AMP J101~J110	FM AMP J111	FM AMP J112~J120	FM AMP J121	CONTROL MOTHER TB150	CONTROL MOTHER TB151	CONTROL MOTHER TB152	CONTROL MOTHER TB153	POWER SUPPLY J154	OTHER
MEMO REC SIG	A32					50					
MEMO REC 0V	B32					49					
CH 1 REC SIG		J101-A32				48					
CH 1 REC 0V		J101-B32				47					
CH 2 REC SIG		J102-A32				46					
CH 2 REC 0V		J102-B32				45					
CH 3 REC SIG		J103-A32				44					
CH 3 REC 0V		J103-B32				43					
CH 4 REC SIG		J104-A32				42					
CH 4 REC 0V		J104-B32				41					
CH 5 REC SIG		J105-A32				40					
CH 5 REC 0V		J105-B32				39					
CH 6 REC SIG		J106-A32				38					
CH 6 REC 0V		J106-B32				37					
CH 7 REC SIG		J107-A32				36					
CH 7 REC 0V		J107-B32				35					
CH 8 REC SIG		J108-A32				34					
CH 8 REC 0V		J108-B32				33					
CH 9 REC SIG		J109-A32				32					
CH 9 REC 0V		J109-B32				31					
CH 10 REC SIG		J110-A32				30					
CH 10 REC 0V		J110-B32				29					
CH 11 REC SIG			A32			28					
CH 11 REC 0V			B32			27					
CH 12 REC SIG				J112-A32		26					
CH 12 REC 0V				J112-B32		25					
CH 13 REC SIG				J113-A32		24					
CH 13 REC 0V				J113-B32		23					
CH 14 REC SIG				J114-A32		22					
CH 14 REC 0V				J114-B32		21					
CH 15 REC SIG				J115-A32		20					
CH 15 REC 0V				J115-B32		19					
CH 16 REC SIG				J116-A32		18					
CH 16 REC 0V				J116-B32		17					
CH 17 REC SIG				J117-A32		16					
CH 17 REC 0V				J117-B32		15					
CH 18 REC SIG				J118-A32		14					
CH 18 REC 0V				J118-B32		13					
CH 19 REC SIG				J119-A32		12					
CH 19 REC 0V				J119-B32		11					
CH 20 REC SIG				J120-A32		10					
CH 20 REC 0V				J120-B32		9					
CH 21 REC SIG					A32	8					
CH 21 REC 0V					B32	7					
R MIC SW	B18					6					
R MIC SIG	A18					5					

Signal	CAL/ MEMO J100	FM AMP J101~J110	FM AMP J111	FM AMP J112~J120	FM AMP J121	CONTROL MOTHER TB150	CONTROL MOTHER TB151	CONTROL MOTHER TB152	CONTROL MOTHER TB153	POWER SUPPLY J154	OTHER
R MIC 0V	B19					4					
CH 1 INV OUT		J101-B18				3					
CH 1 INV 0V		(0VA) REP1-0				2					
CH 2 INV OUT		J102-B18				1					
CH 3 INV OUT		J103-B18					50				
CH 3 INV 0V		(0VA) REP3-0					49				
CH 4 INV OUT		J104-B18					48				
CH 4 INV 0V		(0VA) REP4-0					47				
CH 5 INV OUT		J105-B18					46				
CH 5 INV 0V		(0VA) REP5-0					45				
CH 6 INV OUT		J106-B18					44				
CH 6 INV 0V		(0VA) REP6-0					43				
CH 7 INV OUT		J107-B18					42				
CH 7 INV 0V		(0VA) REP7-0					41				
CH 8 INV OUT		J108-B18					40				
CH 8 INV 0V		(0VA) REP8-0					39				
CH 9 INV OUT		J109-B18					38				
CH 9 INV 0V		(0VA) REP9-0					37				
CH 10 INV OUT		J110-B18					36				
CH 10 INV 0V		(0VA) REP10-0					35				
CH 11 INV OUT			B18				34				
CH 11 INV 0V			(0VA) REP11-0				33				
CH 12 INV OUT				J112-B18			32				
CH 12 INV 0V				(0VA) REP12-0			31				
CH 13 INV OUT				J113-B18			30				
CH 13 INV 0V				(0VA) REP13-0			29				
CH 14 INV OUT				J114-B18			28				
CH 14 INV 0V				(0VA) REP14-0			27				
CH 15 INV OUT				J115-B18			26				
CH 15 INV 0V				(0VA) REP15-0			25				
CH 16 INV OUT				J116-B18			24				
CH 16 INV 0V				(0VA) REP16-0			23				
CH 17 INV OUT				J117-B18			22				
CH 17 INV 0V				(0VA) REP17-0			21				
CH 18 INV OUT				J118-B18			20				
CH 18 INV 0V				(0VA) REP18-0			19				
CH 19 INV OUT				J119-B18			18				
PKH IN SEL		A21	A21	A21	A21		17				
CH 20 INV OUT				J120-B18			16				

AMP MOTHER BOARD WIRING DIAGRAM [2]

Signal		CAL/ MEMO J100	FM AMP J101~J110	FM AMP J111	FM AMP J112~J120	FM AMP J121	CONTROL MOTHER TB150	CONTROL MOTHER TB151	CONTROL MOTHER TB152	CONTROL MOTHER TB153	POWER SUPPLY J154	OTHER
PKH RECAL			B22	B22	B22	B22		15				
CH 21 INV OUT						B18		14				
CAL SEL B		A28						13				
CAL SEL A		B29						12				
VFC MON		A22						11				
CAL ON	A	B31	B31 of J101~J114 exclusive J114					10				
	B		B31 of J101~J121 exclusive J111									
COMP ON		A23						9				
ZERO SHIFT BUS			A27	A27	A27	A27		8				
BUZZER ON		A21						7				
REP		A10	B23	B23	B23	B23		6				
F0 CODE C			B28	B28	B28	B28		5				
F0 CODE B			A28	A28	A28	A28		4				
F0 CODE A			B29	B29	B29	B29		3				
PKH BUS		B24	A22	A22	A22	A22		2				
MON SEL B		B22	A17	A17	A17	A17		1				
MON SEL A		B23	A18	A18	A18	A18			16			
MON OUT 0V		A19							15			
MON OUT		B21							14			
T S CH TAPE/SOURCE	A				(W35) J114-B21				13			
	B			(W22) J111-B21								
TAPE/SOURCE	A		B21 of J101~J114 exclusive J114						12			
	B		B21 of J101~J121 exclusive J111									
TS CH CAR DET EN	A				J114-A19				11			
	B			J111-A19								
ID CH CAR DET EN	A				J113-A19				10			
	B			J121-A19								
CAR DET EN	A		A19 of J101~J114 exclusive J114						9			
	B		A19 of J101~J121 exclusive J121									
WBx2			A23	A23	A23	A23			8			
REC		A31	A31	A31	A31	A31			7			
SPEED CODE C		A26	B26	B26	B26	B26			6			
SPEED CODE B		B27	A26	A26	A26	A26			5			
SPEED CODE A		B28	B27	B27	B27	B27			4			
TS CH MOD OUT				A20					3			
TS CH CAR DET				B20					2			
RESET A			B12	B12	B12	B12			1			
0VD			A8							34		
CH 21 CLOCK						B1				33		
CH 20 CLOCK					J120-B1					32		
CH 19 CLOCK					J119-B1					31		
CH 18 CLOCK					J118-B1					30		
CH 17 CLOCK					J117-B1					29		
CH 16 CLOCK					J116-B1					28		
CH 15 CLOCK					J115-B1					27		
CH 14 CLOCK					J114-B1					26		
CH 13 CLOCK					J113-B1					25		
CH 12 CLOCK					J112-B1					24		
CH 11 CLOCK				B1						23		

NOTE: Indicated A and B for following unit.
A for XR-5000
B for XR-7000

Signal		CAL/ MEMO J100	FM AMP J101~J110	FM AMP J111	FM AMP J112~J120	FM AMP J121	CONTROL MOTHER TB150	CONTROL MOTHER TB151	CONTROL MOTHER TB152	CONTROL MOTHER TB153	POWER SUPPLY J154	OTHER
CH 10 CLOCK			J110-B1							22		
CH 9 CLOCK			J109-B1							21		
CH 8 CLOCK			J108-B1							20		
CH 7 CLOCK			J107-B1							19		
CH 6 CLOCK			J106-B1							18		
CH 5 CLOCK			J105-B1							17		
CH 4 CLOCK			J104-B1							16		
CH 3 CLOCK			J103-B1							15		
CH 2 CLOCK			J102-B1							14		
CH 1 CLOCK			J101-B1							13		
CH 0 CLOCK		B1								12		
CH STATUS BUS		A1	A1	A1	A1	A1				11		
AMP STR8		B2	B2	B2	B2	B2				10		
CH CTL BUS 3			A2	A2	A2	A2				9		
CH CTL BUS 2			B3	B3	B3	B3				8		
CH CTL BUS 1			B4	B4	B4	B4				7		
CH CTL BUS 0			B5	B5	B5	B5				6		
CH ID BUS 3			B6	B6	B6	B6				5		
CH ID BUS 2			B7	B7	B7	B7				4		
CH ID BUS 1			B8	B8	B8	B8				3		
CH ID BUS 0			B9	B9	B9	B9				2		
1.6MHz		A27								1		
FM CAL BUS		A30	A30	A30	A30	A30						
CAL FS	A	B30	B30 of J101~J114 exclusive J114									
	B		B30 of J101~J121 exclusive J111									
DR CAL BUS		A29	A29	A29	A29	A29						
COMP BUS	A	B26	B19 of J101~J114 exclusive J114									
	B		B19 of J101~J121 exclusive J111									
COMP CH CAL FS	A	B25		B30 of J111	B30 of J114							
	B											
COMP CH CAL ON	A	A24		B31 of J111	B31 of J114							
	B											
COMP CH INV OUT	A	A25		B18 of J111	B18 of J114							
	B											
MON BUS		A20	B17	B17	B17	B17						
OPTION BUS 3			B10	B10	B10	B10						
OPTION BUS 2			A10	A10	A10	A10						
OPTION BUS 1			B11	B11	B11	B11						
OPTION BUS 0			A11	A11	A11	A11						
MONITOR OUT		B20										MON +
MONITOR 0V		A19										MON –
FMIC 0V		A17										MIC 1
FMIC SIG		B17										MIC 2
FMIC SW		A16										MIC 3
EDGE REP SIG +		B16										J494-25
EDGE REP SIG –		A15										J494-26
EDGE REP SIG 0V		B15										J494-11

NOTE: MON +, – – MONITOR OUT BNC
MIC 1, 2, 3 – MIC INPUT
J494 – HEAD AMP
Indicated A and B for following unit.
A for XR-5000
B for XR-7000

AMP MOTHER BOARD WIRING DIAGRAM [3]

Signal	CAL/ MEMO J100	FM AMP J101~J110	FM AMP J111	FM AMP J112~J120	FM AMP J121	CONTROL MOTHER TB150	CONTROL MOTHER TB151	CONTROL MOTHER TB152	CONTROL MOTHER TB153	POWER SUPPLY J154	OTHER
CH-13 REP SIG +	A14										J495-21
CH-13 REP SIG –	B14										J495-22
CH-13 REP SIG 0V	A13										J495-13
LEVEL VR +	B13										VR +
LEVEL VR –	A12										VR –
LEVEL 0V	AB3										VR 0
EAR PHONE +	B12										PHN +
EAR PHONE –	A11										PHN –
EAR PHONE 0V	B11										PHN 0
CH 1 DATA INPUT		J101-A25									IN1 +
CH 1 DATA 0V		J101-B25									IN1 –
CH 2 DATA INPUT		J102-A25									IN2 +
CH 2 DATA 0V		J102-B25									IN2 –
CH 3 DATA INPUT		J103-A25									IN3 +
CH 3 DATA 0V		J103-B25									IN3 –
CH 4 DATA INPUT		J104-A25									IN4 +
CH 4 DATA 0V		J104-B25									IN4 –
CH 5 DATA INPUT		J105-A25									IN5 +
CH 5 DATA 0V		J105-B25									IN5 –
CH 6 DATA INPUT		J106-A25									IN6 +
CH 6 DATA 0V		J106-B25									IN6 –
CH 7 DATA INPUT		J107-A25									IN7 +
CH 7 DATA 0V		J107-B25									IN7 –
CH 8 DATA INPUT		J108-A25									IN8 +
CH 8 DATA 0V		J108-B25									IN8 –
CH 9 DATA INPUT		J109-A25									IN9 +
CH 9 DATA 0V		J109-B25									IN9 –
CH 10 DATA INPUT		J110-A25									IN10 +
CH 10 DATA 0V		J110-B25									IN10 –
CH 11 DATA INPUT			A25								IN11 +
CH 11 DATA 0V			B25								IN11 –
CH 12 DATA INPUT				J112-A25							IN12 +
CH 12 DATA 0V				J112-B25							IN12 –
CH 13 DATA INPUT				J113-A25							IN13 +
CH 13 DATA 0V				J113-B25							IN13 –
CH 14 DATA INPUT				J114-A25							IN14 +
CH 14 DATA 0V				J114-B25							IN14 –
CH 15 DATA INPUT				J115-A25							IN15 +
CH 15 DATA 0V				J115-B25							IN15 –
CH 16 DATA INPUT				J116-A25							IN16 +
CH 16 DATA 0V				J116-B25							IN16 –
CH 17 DATA INPUT				J117-A25							IN17 +
CH 17 DATA 0V				J117-B25							IN17 –
CH 18 DATA INPUT				J118-A25							IN18 +
CH 18 DATA 0V				J118-B25							IN18 –

NOTE. J495 – HEAD AMP
VR +, –, 0 – SP VR
PHN +, –, 0 – SPEAKER/EAR PHONE
IN1~18 – INPUT BNC 1CH~18CH

Signal	CAL/ MEMO J100	FM AMP J101~J110	FM AMP J111	FM AMP J112~J120	FM AMP J121	CONTROL MOTHER TB150	CONTROL MOTHER TB151	CONTROL MOTHER TB152	CONTROL MOTHER TB153	POWER SUPPLY J154	OTHER
CH 19 DATA INPUT				J119-A25							IN19 +
CH 19 DATA 0V				J119-B25							IN19 –
CH 20 DATA INPUT				J120-A25							IN20 +
CH 20 DATA 0V				J120-B25							IN20 –
CH 21 DATA INPUT					A25						IN21 +
CH 21 DATA 0V					B25						IN21 –
CH 1 REP SIG +		J101-A16									J494-23
CH 1 REP SIG –		J101-B16									J494-24
CH 1 REP SIG 0V		(0VA) J101-A15									J494-11, 13
CH 2 REP SIG +		J102-A16									J494-21
CH 2 REP SIG –		J102-B16									J494-22
CH 2 REP SIG 0V		(0VA) J102-A15									J494-11, 13
CH 3 REP SIG +		J103-A16									J494-19
CH 3 REP SIG –		J103-B16									J494-20
CH 3 REP SIG 0V		(0VA) J103-A15									J494-11, 13
CH 4 REP SIG +		J104-A16									J494-17
CH 4 REP SIG –		J104-B16									J494-18
CH 4 REP SIG 0V		(0VA) J104-A15									J494-11, 13
CH 5 REP SIG +		J105-A16									J494-15
CH 5 REP SIG –		J105-B16									J494-16
CH 5 REP SIG 0V		(0VA) J105-A15									J494-11, 13
CH 6 REP SIG +		J106-A16									J494-9
CH 6 REP SIG –		J106-B16									J494-10
CH 6 REP SIG 0V		(0VA) J106-A15									J494-11, 13
CH 7 REP SIG +		J107-A16									J494-7
CH 7 REP SIG –		J107-B16									J494-8
CH 7 REP SIG 0V		(0VA) J107-A15									J494-11, 13
CH 8 REP SIG +		J108-A16									J494-5
CH 8 REP SIG –		J108-B16									J494-6
CH 8 REP SIG 0V		(0VA) J108-A15									J494-11, 13
CH 9 REP SIG +		J109-A16									J494-3
CH 9 REP SIG –		J109-B16									J494-4
CH 9 REP SIG 0V		(0VA) J109-A15									J494-11, 13
CH 10 REP SIG +		J110-A16									J494-1
CH 10 REP SIG –		J110-B16									J494-2
CH 10 REP SIG 0V		(0VA) J110-A15									J494-11, 13
CH 11 REP SIG +			A16								J495-25
CH 11 REP SIG –			B16								J495-26
CH 11 REP SIG 0V			(0VA) A15								J495-13, 15

NOTE: IN19~21 – INPUT BNC 19CH~21CH
J494, J495 – HEAD AMP

AMP MOTHER BOARD WIRING DIAGRAM [4]

Signal	CAL/ MEMO J100	FM AMP J101~J110	FM AMP J111	FM AMP J112~J120	FM AMP J121	CONTROL MOTHER TB150	CONTROL MOTHER TB151	CONTROL MOTHER TB152	CONTROL MOTHER TB153	POWER SUPPLY J154	OTHER
CH 12 REP SIG +				J112-A16							J495-23
CH 12 REP SIG –				J112-B16							J495-24
CH 12 REP SIG 0V				(0VA) J112-A15							J495-13, 15
CH 13 REP SIG +				J113-A16							J495-21
CH 13 REP SIG –				J113-B16							J495-22
CH 13 REP SIG 0V				(0VA) J113-A15							J495-13, 15
CH 14 REP SIG +				J114-A16							J495-19
CH 14 REP SIG –				J114-B16							J495-20
CH 14 REP SIG 0V				(0VA) J114-A15							J495-13, 15
CH 15 REP SIG +				J115-A16							J495-17
CH 15 REP SIG –				J115-B16							J495-18
CH 15 REP SIG 0V				(0VA) J115-A15							J495-13, 15
CH 16 REP SIG +				J116-A16							J495-11
CH 16 REP SIG –				J116-B16							J495-12
CH 16 REP SIG 0V				(0VA) J116-A15							J495-13, 15
CH 17 REP SIG +				J117-A16							J495-9
CH 17 REP SIG –				J117-B16							J495-10
CH 17 REP SIG 0V				(0VA) J117-A15							J495-13, 15
CH 18 REP SIG +				J118-A16							J495-7
CH 18 REP SIG –				J118-B16							J495-8
CH 18 REP SIG 0V				(0VA) J118-A15							J495-13, 15
CH 19 REP SIG +				J119-A16							J495-5
CH 19 REP SIG –				J119-B16							J495-6
CH 19 REP SIG 0V				(0VA) J119-A15							J495-13, 15
CH 20 REP SIG +				J120-A16							J495-3
CH 20 REP SIG –				J120-B16							J495-4
CH 20 REP SIG 0V				(0VA) J120-A15							J495-13, 15
CH 21 REP SIG +					A16						J495-1
CH 21 REP SIG –					B16						J495-2
CH 21 REP SIG 0V					(0VA) A15						J495-13, 15
CH 1 DATA OUTPUT		J101-A13									OUT1 +
CH 1 DATA 0V		J101-B13									OUT1 –
CH 2 DATA OUTPUT		J102-A13									OUT2 +
CH 2 DATA 0V		J102-B13									OUT2 –
CH 3 DATA OUTPUT		J103-A13									OUT3 +
CH 3 DATA 0V		J103-B13									OUT3 –
CH 4 DATA OUTPUT		J104-A13									OUT4 +
CH 4 DATA 0V		J104-B13									OUT4 –
CH 5 DATA OUTPUT		J105-A13									OUT5 +
CH 5 DATA 0V		J105-B13									OUT5 –

NOTE: J495 – HEAD AMP
OUT1~5 – OUTPUT BNC

Signal	CAL/ MEMO J100	FM AMP J101~J110	FM AMP J111	FM AMP J112~J120	FM AMP J121	CONTROL MOTHER TB150	CONTROL MOTHER TB151	CONTROL MOTHER TB152	CONTROL MOTHER TB153	POWER SUPPLY J154	OTHER
CH 6 DATA OUTPUT		J106-A13									OUT6 +
CH 6 DATA 0V		J106-B13									OUT6 –
CH 7 DATA OUTPUT		J107-A13									OUT7 +
CH 7 DATA 0V		J107-B13									OUT7 –
CH 8 DATA OUTPUT		J108-A13									OUT8 +
CH 8 DATA 0V		J108-B13									OUT8 –
CH 9 DATA OUTPUT		J109-A13									OUT9 +
CH 9 DATA 0V		J109-B13									OUT9 –
CH 10 DATA OUTPUT		J110-A13									OUT10 +
CH 10 DATA 0V		J110-B13									OUT10 –
CH 11 DATA OUTPUT			A13								OUT11 +
CH 11 DATA 0V			B13								OUT11 –
CH 12 DATA OUTPUT				J112-A3							OUT12 +
CH 12 DATA 0V				J112-B3							OUT12 –
CH 13 DATA OUTPUT				J113-A3							OUT13 +
CH 13 DATA 0V				J113-B3							OUT13 –
CH 14 DATA OUTPUT				J114-A13							OUT14 +
CH 14 DATA 0V				J114-B13							OUT14 –
CH 15 DATA OUTPUT				J115-A13							OUT15 +
CH 15 DATA 0V				J115-B13							OUT15 –
CH 16 DATA OUTPUT				J116-A13							OUT16 +
CH 16 DATA 0V				J116-B13							OUT16 –
CH 17 DATA OUTPUT				J117-A13							OUT17 +
CH 17 DATA 0V				J117-B13							OUT17 –
CH 18 DATA OUTPUT				J118-A13							OUT18 +
CH 18 DATA 0V				J118-B13							OUT18 –
CH 19 DATA OUTPUT				J119-A13							OUT19 +
CH 19 DATA 0V				J119-B13							OUT19 –
CH 20 DATA OUTPUT				J120-A13							OUT20 +
CH 20 DATA 0V				J120-B13							OUT20 –
CH 21 DATA OUTPUT					A13						OUT21 +
CH 21 DATA 0V					B13						OUT21 –
+5VD	A9, B9	A9	A9	A9	A9					8	
0VD	A8, B8	A8	A8	A8	A8				34	7	
+10V	A7, B7	A7	A7	A7	A7					6	
–10V	A6, B6	A6	A6	A6	A6					5	
+5VA	A5, B5	A5	A5	A5	A5					4	
–5VA	A4, B4	A4	A4	A4	A4					3	
0VA	A3, B3	A3	A3	A3	A3	2	19, 21, 23, 25, 27, 29, 31, 33, 35, 37, 39, 41, 43, 45, 47, 49			1, 2	

NOTE: OUT6~21 –OUTPUT BNC

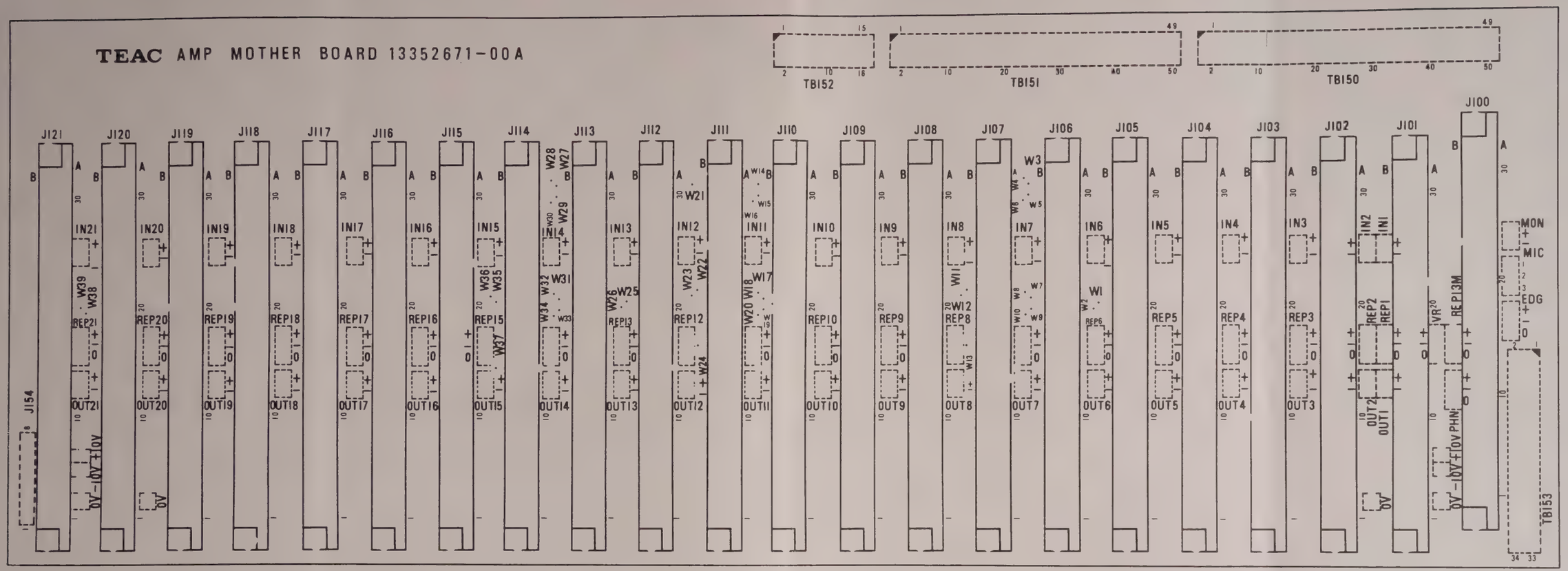

For XR-5000

Ref. No.	Parts No.	Description	Q'TY
	13352671-00	PCB, AMP MOTHER BOARD	1
		- Harness -	
	13061723-00	INPUT, 14CH	1
	13061725-00	OUTPUT, 14CH	1
	13061727-00	Head Amp 14/21CH	1
	13061729-00	Head Amp 14CH	1
		- Connectors -	
J100 to 114	13123341	64P	15
J154	13150595	8P (5045-08AG)	1

For XR-7000

Ref. No.	Parts No.	Description	Q'TY
	13352671-00	PCB, AMP MOTHER BOARD	1
		- Harness -	
	13061724-00	INPUT, 21CH	1
	13061726-00	OUTPUT, 21CH	1
	13061727-00	Head Amp 14/21CH	1
	13061728-00	Head Amp 21CH	1
		- Connectors -	
J100 to 121	13123341	64P	22
J154	13150595	8P (5045-08AG)	1

4-1-17 CONTROL MOTHER BOARD WIRING DIAGRAM [1]

	BIAS/ MIXER J200	BIAS/ MIXER J201	MAIN MPU J202	MAIN MPU J203	DISPLAY MPU J204	ID BOARD J205	GPIB J206	POWER SUPPLY J263	AMP MOTHER TB250	AMP MOTHER TB251	AMP MOTHER TB252	SUB MOTHER TB253	EL DISPLAY TB254	EL DISPLAY TB290	OTHER
M-DSP OUT SEL			A1		A10										
DSP-M ACK			B1		B10										
M-DSP D0			A2		A11										
M-DSP D1			B2		B11										
M-DSP D2			A3		A12										
M-DSP D3			B3		B12										
M-DSP D4			A4		A13										
M-DSP D5			B4		B13										
M-DSP D6			A5		A14										
M-DSP D7			B5		B14										
DSP M OUT SEL			A6		A15										
M-DSP ACK			B6		B15										
DSP-M D0			A7		A16										
DSP-M D1			B7		B16										
DSP-M D2			A8		A17										
DSP-M D3			B8		B17										
DSP-M D4			A9		A18										
DSP-M D5			B9		B18										
DSP-M D6			A10		A19										
DSP-M D7			B10		B19										
DSP IMS INT			A11		A22										
MON RANGE A			B11		A20										
MON RANGE B			A12		B20										
MON RANGE C			B12		A21										
BE			A13			A13									
BQ			B13			B13									
BR/W			A14			A14									
MEXT BD0			B14			B14									
MEXT BD1			A15			A15									
MEXT BD2			B15			B15									
MEXT BD3			A16			A16									
MEXT BD4			B16			B16									
MEXT BD5			A17			A17									
MEXT BD6			B17			B17									
MEXT BD7			A18			A18									
ID W REQ			B18			B18									
ID R REQ			A19			A19									
ID W STRB			B19			B19									
ID R STRB			A20			A20									
ID R INT			B20			B20									
ID TRG FLAG			A21			B3									
UNLOAD			B21									19			
STOP			A22									20			
FWD			B22									21			
REV			A23									22			
F FWD			B23									23			

	BIAS/ MIXER J200	BIAS/ MIXER J201	MAIN MPU J202	MAIN MPU J203	DISPLAY MPU J204	ID BOARD J205	GPIB J206	POWER SUPPLY J263	AMP MOTHER TB250	AMP MOTHER TB251	AMP MOTHER TB252	SUB MOTHER TB253	EL DISPLAY TB254	EL DISPLAY TB290	OTHER
F REV			A24									24			
EJECT			B24									25			
TTP D0			A25									26			
TTP D1			B25									27			
TTP D2			A26									28			
TTP D3			B26									29			
TTP D4			A27									30			
TTP D5			B27									31			
TTP D6			A28									32			
TTP D7			B28									33			
PORT SEL A			A29									34			
PORT SEL B			B29									35			
PORT SEL C			A30									36			
2CM PULSE			B30									37			
ID REC START			A31			B4									
BE CLOCK 0	B3		B32												
BE CLOCK 1	A4		A33												
BATT			B33												BAT +
RESET A			A34								35				
RESET B			B34		A24	B12	A8					38	25		
POWER DOWN			A35		B24							46			
POWER A			B35												J255-5
POWER B			A36												J255-4
OVER HEAT			B36												J255-3
POWER OFF EN			A37												J255-2
POWER SW OFF			B37												J255-1
CH ID 0				A1							2				
CH ID 1				B1							3				
CH ID 2				A2							4				
CH ID 3				B2							5				
SERVO LOCK						A4						18			
CH CTL 0				A3							6				
CH CTL 1				B3							7				
CH CTL 2				A4							8				
CH CTL 3				B4							9				
AMP STRB	A3			A5							10				
CH STATUS BUS	B2			B5							11				
CH 0 CLOCK				A6							12				
CH 1 CLOCK				B6							13				
CH 2 CLOCK				A7							14				
CH 3 CLOCK				B7							15				
CH 4 CLOCK				A8							16				
CH 5 CLOCK				B8							17				
CH 6 CLOCK				A9							18				
CH 7 CLOCK				B9							19				
CH 8 CLOCK				A10							20				
CH 9 CLOCK				B10							21				
CH 10 CLOCK				A11							22				
CH 11 CLOCK				B11							23				
CH 12 CLOCK				A12							24				

CONTROL MOTHER BORAD WIRING DIAGRAM [2]

	BIAS/ MIXER J200	BIAS/ MIXER J201	MAIN MPU J202	MAIN MPU J203	DISPLAY MPU J204	ID BOARD J205	GPIB J206	POWER SUPPLY J263	AMP MOTHER TB250	AMP MOTHER TB251	AMP MOTHER TB252	SUB MOTHER TB253	EL DISPLAY TB254	EL DISPLAY TB290	OTHER
CH 13 CLOCK				B12							25				
CH 14 CLOCK				A13							26				
CH 15 CLOCK				B13							27				
CH 16 CLOCK				A14							28				
CH 17 CLOCK				B14							29				
CH 18 CLOCK				A15							30				
CH 19 CLOCK				B15							31				
CH 20 CLOCK				A16							32				
CH 21 CLOCK				B16							33				
SPEED CODE A				A17		A6					38	39			
SPEED CODE B				B17		B6					39	40			
SPEED CODE C				A18		A7					40	47			
REC	A7			B18		B5					41	42			
ERASE REC	B1			A19											
ERASE REV	A2			B19											
ID	A5			A20		A5									
T. SERVO	B5			B20								43			
$\overline{WBx2}$				A21											
CAR DET EN				B21							42				
ID CH CAR DET EN				A22							43				
TS CH CAR DET EN				B22							44				
TAPE/$\overline{SOURCE}$				A23		A8					45				
TS CH TAPE/ $\overline{SOURCE}$				B23							46				
ERASE CHECK SIG	B7			A24							47	50			
MON OUT				B24	A25		A32				48				
MON 0V				A25	B25		B32				49				
MON SEL A				B25							50				
MON SEL B				A26						1					
PKH BUS				B26						2					
F0 CODE A				A27						3					
F0 CODE B				B27						4					
F0 CODE C				A28						5					
TS CH MOD OUT				B28							37	41			
$\overline{REP}$				A29						6		17			
BUZZER ON				B29						7					
ZERO SHIFT BUS				A30						8					
$\overline{COMP\ ON}$				B30						9					
$\overline{CAL\ ON}$				A31						10					
VFC MON				B31						11					
$\overline{CAL\ SEL\ A}$				A32						12					
$\overline{CAL\ SEL\ B}$				B32						13					
PKH RECAL				A33						15					
PKH INSEL				B33						17					
$\overline{M\text{-}GP\ OUT\ SEL}$				A34			A9								
$\overline{GP\text{-}M\ ACK}$				B34			B9								
M-GP D0				A35			A10								

	BIAS/ MIXER J200	BIAS/ MIXER J201	MAIN MPU J202	MAIN MPU J203	DISPLAY MPU J204	ID BOARD J205	GPIB J206	POWER SUPPLY J263	AMP MOTHER TB250	AMP MOTHER TB251	AMP MOTHER TB252	SUB MOTHER TB253	EL DISPLAY TB254	EL DISPLAY TB290	OTHER
M-GP D1				B35			B10								
M-GP D2				A36			A11								
M-GP D3				B36			B11								
M-GP D4				A37			A12								
M-GP D5				B37			B12								
M-GP D6				A38			A13								
M-GP D7				B38			B13								
$\overline{GP\text{-}M\ OUT\ SEL}$				A39			A14								
$\overline{M\text{-}GP\ ACK}$				B39			B14								
GP-M D0				A40			A15								
GP-M D1				B40			B15								
GP-M D2				A41			A16								
GP-M D3				B41			B16								
GP-M D4				A42			A17								
GP-M D5				B42			B17								
GP-M D6				A43			A18								
GP-M D7				B43			B18								
R MIC 0V				A44, B44					4						
R MIC SIG				A45					5						
$\overline{R\ MIC\ SW}$				B45					6						
EL CLK					A1									13	
EL DIN					B1									15	
$\overline{EL\ HD}$					A2									11	
$\overline{EL\ VD}$					B2									9	
$\overline{FRONT\ SW\ SEL}$					A3								11		
$\overline{FRONT\ LED\ SEL}$					B3								12		
SEXT BD0					A4								13		
SEXT BD1					B4								14		
SEXT BD2					A5								15		
SEXT BD3					B5								16		
SEXT BD4					A6								17		
SEXT BD5					B6								18		
SEXT BD6					A7								19		
SEXT BD7					B7								20		
FRONT PORT D					A8								21		
FRONT PORT C					B8								22		
FRONT PORT B					A9								23		
FRONT PORT A					B9								24		
4.8MHz	A1				B22										
1.6MHz					A23							1	49		
$\overline{ID\ TRG}$					B23	A12	B8								
$\overline{FWD/REV}$						B7							44		
ID REC SIG	A6					B8									
CH 21 INV OUT							B21				14				
CH 20 INV OUT							A22				16				
CH 19 INV OUT							B22				18				
CH 18 INV OUT							A23				20				
CH 17 INV OUT							B23				22				
CH 16 INV OUT							A24				24				
CH 15 INV OUT							B24				26				

CONTROL MOTHER BOARD WIRING DIAGRAM [3]

	BIAS/ MIXER J200	BIAS/ MIXER J201	MAIN MPU J202	MAIN MPU J203	DISPLAY MPU J204	ID BOARD J205	GPIB J206	POWER SUPPLY J263	AMP MOTHER TB250	AMP MOTHER TB251	AMP MOTHER TB252	SUB MOTHER TB253	EL DISPLAY TB254	EL DISPLAY TB290	OTHER
CH 14 INV OUT							A25			28					
CH 13 INV OUT							B25			30					
CH 12 INV OUT							A26			32					
CH 11 INV OUT							B26			34					
CH 10 INV OUT							A27			36					
CH 9 INV OUT							B27			38					
CH 8 INV OUT							A28			40					
CH 7 INV OUT							B28			42					
CH 6 INV OUT							A29			44					
CH 5 INV OUT							B29			46					
CH 4 INV OUT							A30			48					
CH 3 INV OUT							B30			50					
CH 2 INV OUT							A31		1						
CH 1 INV OUT							B31		3						
T SERVO REC SIG	B6											45			
TS CH CAR DET											36	48			
CH 21 REC SIG		A4							8						
CH 21 REC 0V		B4							7						
CH 20 REC SIG		A5							10						
CH 20 REC 0V		B5							9						
CH 19 REC SIG		A6							12						
CH 19 REC 0V		B6							11						
CH 18 REC SIG		A7							14						
CH 18 REC 0V		B7							13						
CH 17 REC SIG		A8							16						
CH 17 REC 0V		B8							15						
CH 16 REC SIG		A9							18						
CH 16 REC 0V		B9							17						
CH 15 REC SIG		A10							20						
CH 15 REC 0V		B10							19						
CH 14 REC SIG		A11							22						
CH 14 REC 0V		B11							21						
CH 13 REC SIG		A12							24						
CH 13 REC 0V		B12							23						
CH 12 REC SIG		A13							26						
CH 12 REC 0V		B13							25						
CH 11 REC SIG		A14							28						
CH 11 REC 0V		B14							27						
CH 10 REC SIG		A15							30						
CH 10 REC 0V		B15							29						
CH 9 REC SIG		A16							32						
CH 9 REC 0V		B16							31						
CH 8 REC SIG		A17							34						
CH 8 REC 0V		B17							33						
CH 7 REC SIG		A18							36						
CH 7 REC 0V		B18							35						
CH 6 REC SIG		A19							38						
CH 6 REC 0V		B19							37						
CH 5 REC SIG		A20							40						
CH 5 REC 0V		B20							39						

	BIAS/ MIXER J200	BIAS/ MIXER J201	MAIN MPU J202	MAIN MPU J203	DISPLAY MPU J204	ID BOARD J205	GPIB J206	POWER SUPPLY J263	AMP MOTHER TB250	AMP MOTHER TB251	AMP MOTHER TB252	SUB MOTHER TB253	EL DISPLAY TB254	EL DISPLAY TB290	OTHER
CH 4 REC SIG		A21							42						
CH 4 REC 0V		B21							41						
CH 3 REC SIG		A22							44						
CH 3 REC 0V		B22							43						
CH 2 REC SIG		A23							46						
CH 2 REC 0V		B23							45						
CH 1 REC SIG		A24							48						
CH 1 REC 0V		B24							47						
MEMO REC SIG		A25							50						
MEMO REC 0V		B25							49						
ID CH REP SIG +						A10									REP ID +
ID CH REP SIG –						B10									REP ID –
ID CH REP SIG 0V						A9, B9 A11, B11									REP ID 0
+15V			A38		B32			10						1, 2	
0V (for 15V)			B38					9							
+5VD	A10, B10		A39, B39		A26, B26	A21, B21	A1, B1	7, 8					1, 2, 3, 4	3, 4	
0VD	A11, B11		A40, B40		A27, B27	A22, B22	A2, B2	5, 6			34		5, 6, 7, 8, 9, 10	5, 6, 7, 8, 10, 12, 14, 16	BAT –
0VA	A13, B13		A42, B42		A29, B29	A24, B24	A4, B4	3, 4	2	19, 21, 23, 25, 27, 29, 31, 33, 35, 37, 39, 41, 43, 45, 47, 49		5, 6, 7, 8, 9, 10, 11, 12			
+10V	A15, B15		A44, B44		A31, B31		A6, B6	2							
–10V	A16, B16		A45, B45		A32		A7, B7	1							
+5VA	A12, B12		A41, B41		A28, B28	A23, B23	A3, B3					1, 2, 3, 4			
–5VA	A14, B14		A43, B43		A30, B30	A25, B25	A5, B5					13, 14, 15, 16			

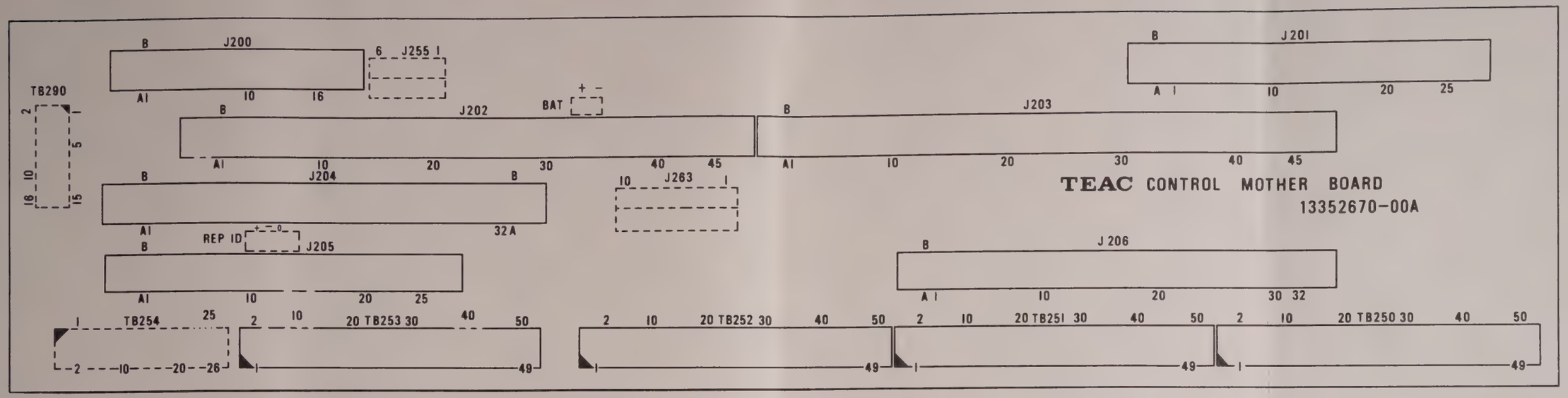

Ref. No.	Parts No.	Description	Q'TY
	13352670-00	PCB, CONTROL MOTHER BOARD	1
		- Connectors -	
J255	13250604	5046-06AG	1
J263	13150608	5046-10AG	1
J200	13123339	32P	1
J201, J205	13121112	50P	2
J204, J206	13123341	64P	2
J202, J203	13123342	90P	2

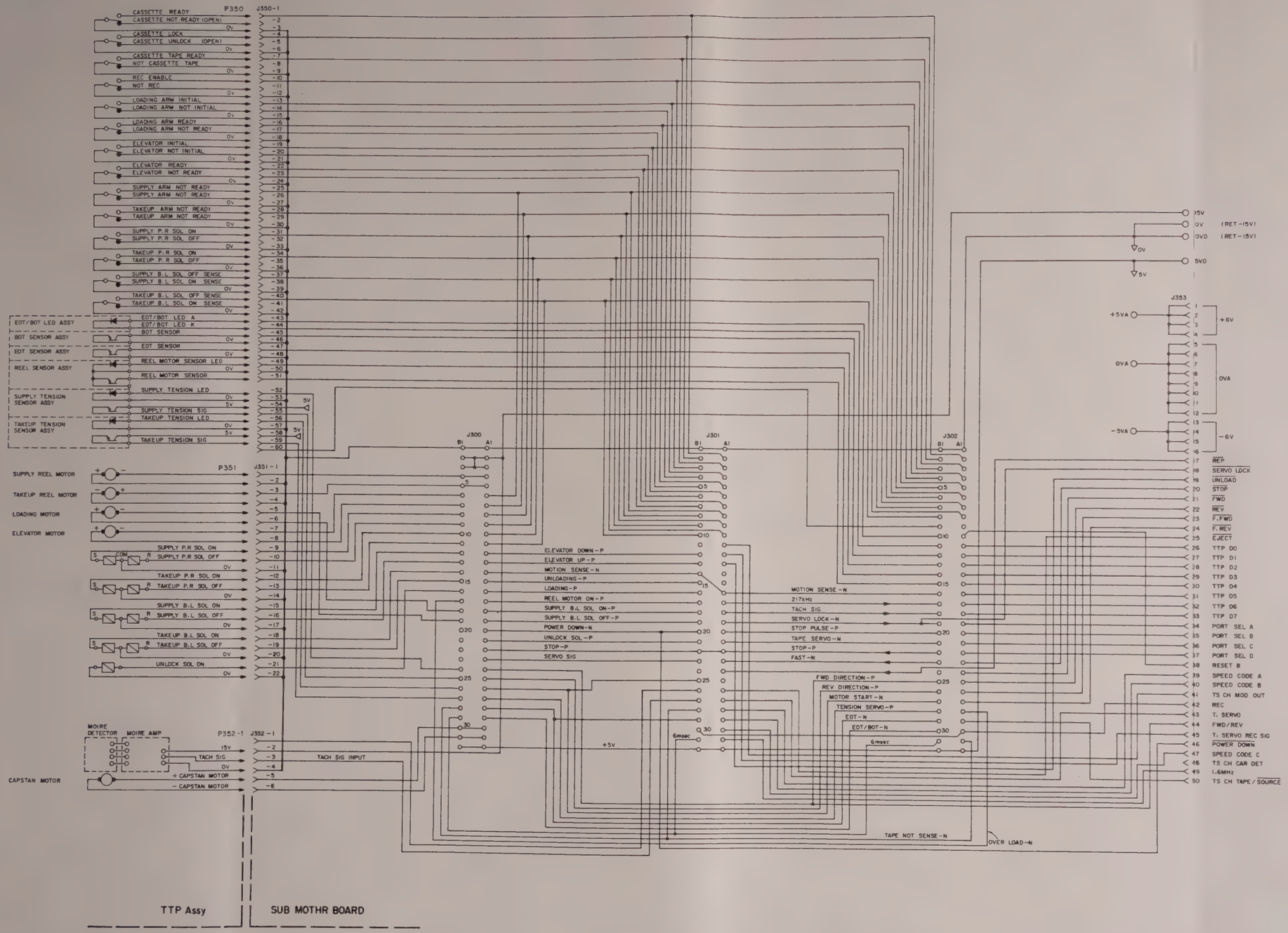

XR-5000/XR-7000

NOTE: If necessary, replacement (or order) parts please refer to "SECTION 5 MECHANICAL" in the Exploded views -3 and -4 for details.

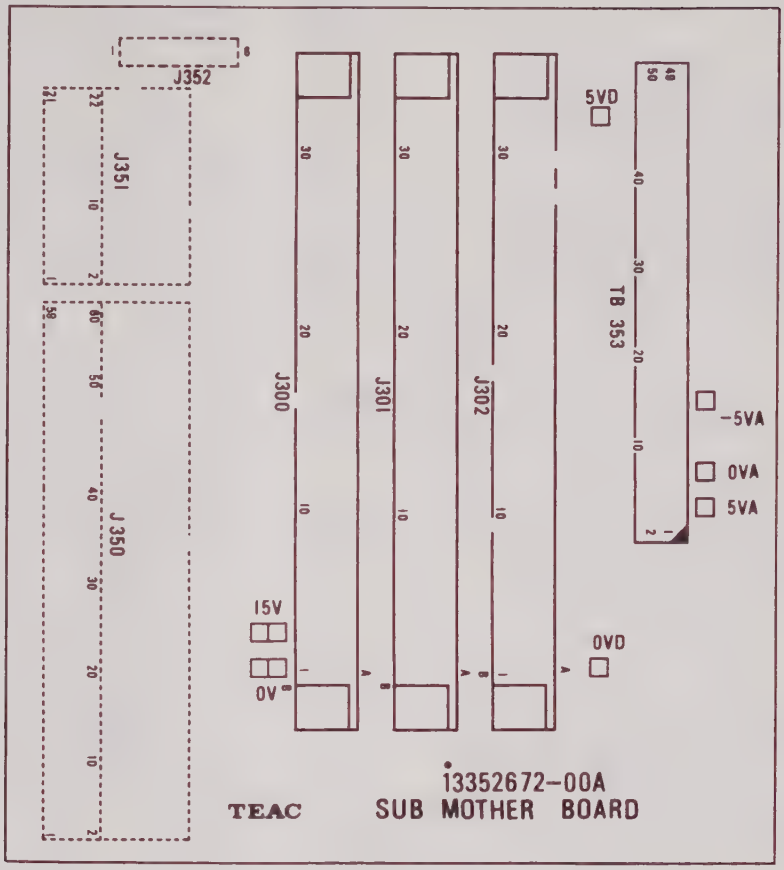

PARTS LIST

Ref. No.	Parts No.	Description	Q'TY
	13352672-00	PCB, SUB MOTHER BOARD	1
		- Connectors -	
J352	13150604	5046-06AG	1
J351	13121615	FCN 725 P022 AV/0	1
J350	13121634	FCN 725 P060 AV/0	1
J300 to 302	13123341	64P	3

ADJUSTMENT LOCATION – CAL/MEMO PCBA –

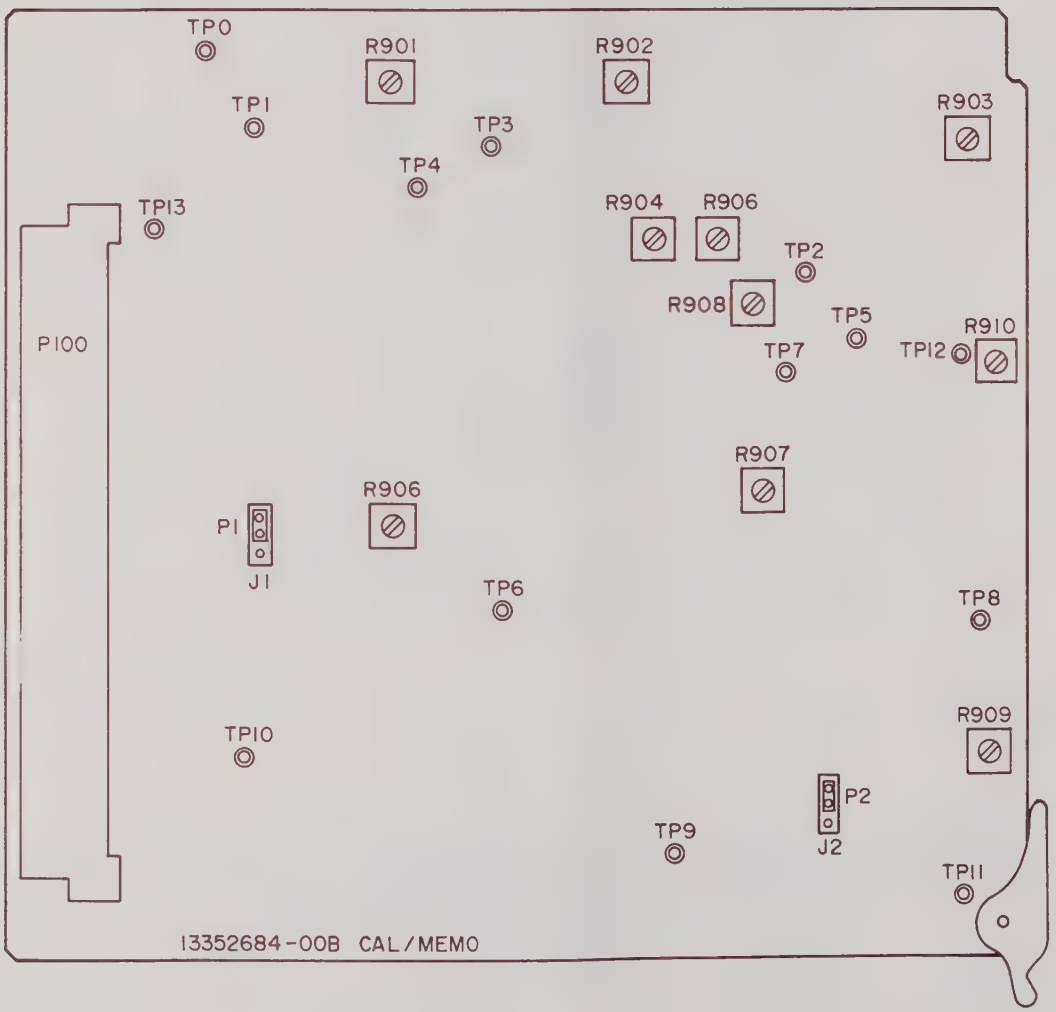

4-2-1 Adjusting the CAL/MEMO PCBA

A) Adjusting the CAL circuit

1. CAL circuit supply voltage

- Connect DC voltmeter between TP-4 and TP-0 (GND).
- Adjust R904 so that voltmeter reads +1.40 V ±10mV.

2. CAL 0%

- Connect DC voltmeter between TP-1 and TP-0 (GND).
- Press CAL 0% switch.
- Adjust R901 so that voltmeter reads 0 V ±0.5 mV.

3. CAL DC +100%

- Connect DC voltmeter between TP-1 and TP-0 (GND).
- Press CAL DC +100% switch.
- Adjust R908 so that voltmeter reads +1.000 V ±1 mV.

4. CAL DC -100%

- Connect DC voltmeter between TP-1 and TP-0 (GND).
- Press CAL DC -100% switch.
- Adjust R905 so that voltmeter reads -1.000 V ±1 mV.

5. CAL AC (250 Hz)

- Connect AC millivoltmeter between TP-1 and TP-0 (GND).
- Set tape speed to 4.8 cm/s.
- Press CAL AC 100% switch.
- Adjust R902 so that millivoltmeter reads 0.707 Vrms ±5 mVrms.

6. CAL AC (1 kHz)

- Connect AC millivoltmeter between TP-1 and TP-0 (GND).
- Set tape speed to 9.5 cm/s.
- Press CAL AC 100% switch.
- Adjust R903 so that millivoltmeter reads 0.707 Vrms ±5 mVrms.

B) Adjusting the MONITOR COMP circuit

- Preparation -

Set short socket of jumper connector J1 to position 0. (This setting causes 0V to be applied to the input of the monitor.)

1. Monitor circuit (IC U14) offset

- Connect DC voltmeter between TP-6 and TP-0 (GND).
- Adjust R906 so that voltmeter reads 0 V ±0.5 mV.

2. Monitor circuit (IC U15) offset

- Connect DC voltmeter between TP-7 and TP-0 (GND).
- Adjust R907 so that voltmeter reads 0 V ±1 mV.

3. Noise COMP circuit (IC U27) offset

- Connect DC voltmeter between TP-11 and TP-0 (GND).
- Short the pin A25 of the connector P100 with TP-0 (GND).
- Adjust R909 so that voltmeter reads 0 V ±2 mV.

NOTE: After adjustment, return short socket of jumper connector J1 to position 1.

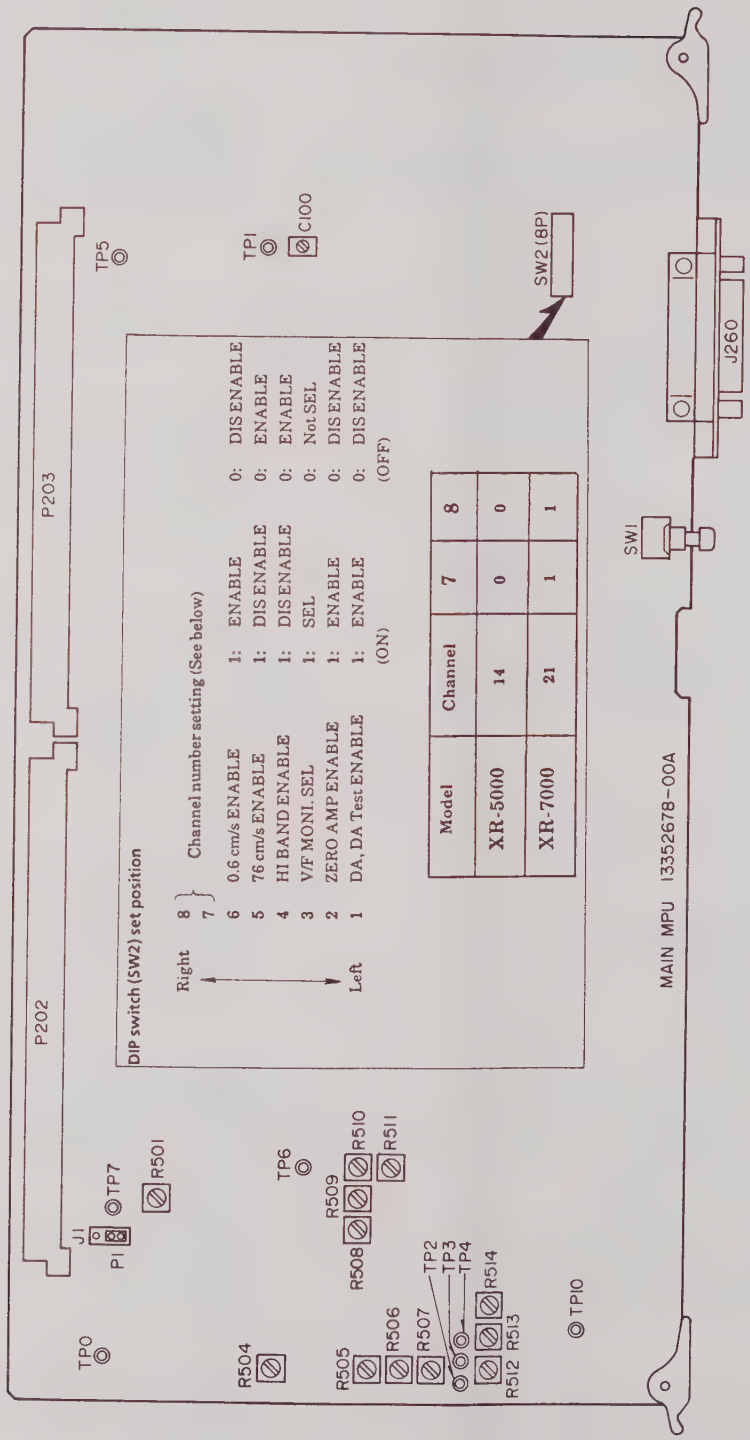
P202
P203
TP5
TP1
C100
SW2 (8P)
J260
SW1
TP0
J1
P1
TP7
R501
TP6
R504
R505
R506
R507
R508
R509
R510
R511
TP2
TP3
TP4
R514
R512 R513
TP10
DIP switch (SW2) set position
Right
Left
8
7
6
0.6 cm/s ENABLE
1: ENABLE
0: DISENABLE
5
76 cm/s ENABLE
1: DISENABLE
0: ENABLE
4
HI BAND ENABLE
1: DISENABLE
0: ENABLE
3
V/F MONI. SEL
1: SEL
0: Not SEL
2
ZERO AMP ENABLE
1: ENABLE
0: DISENABLE
1
DA, DA Test ENABLE
1: ENABLE (ON)
0: DISENABLE (OFF)
Channel number setting (See below)
Model
Channel
7
8
XR-5000
14
0
0
XR-7000
21
1
1
MAIN MPU 13352678-00A

4-2-2 Adjusting the MAIN MPU PCBA

A) Adjusting the D/A converter

NOTE: Do not use extension card during adjustment of MAIN MPU PCBA. Remove BIAS MIXER PCBA, then insert MAIN MPU PCBA directly into the slot of main unit.

- Preparation -

Set DIP switch SW2-1 to ON, then press reset switch on rear panel.

1. D/A converter reference voltage

- Connect DC voltmeter between TP-2 and TP-10 (GND).
- Adjust R501 so that voltmeter reads +5.120 V ±2 mV.

2. IC U81 offset

- Connect DC voltmeter between TP-4 and TP-10 (GND).
- Press CAL DC +100% switch.
  When CAL DC +100% switch is pressed, DIP switch SW2-1 causes the CPU to send a digital code (BD0 to BD7) corresponding to the positive full-scale of the D/A converter input.
- Adjust R512 so that voltmeter reads 0 V ±0.5 mV because of voltage offset.

3. Gain (positive full-scale)

- Connect DC voltmeter between TP-3 and TP-10 (GND).
- Press CAL DC +100% switch.
- Adjust R514 so that voltmeter reads -2.560 V ±1 mV.

4. Gain (negative full-scale)

- Connect DC voltmeter between TP-3 and TP-10 (GND).
- Press CAL DC -100% switch.
  When CAL DC-100% switch is pressed, DIP switch SW2-1 causes the CPU to send a digital code (BD0 to BD7) corresponding to the negative full-scale of the D/A converter input.
- Adjust R513 so that voltmeter reads -2.559 V ±1 mV.

B) Adjusting the A/D converter

- Preparation -

Set DIP switch SW2-1 to ON, then press reset switch on rear panel.

1. IC U84 offset

- Connect DC voltmeter between Pin 6 of IC U84 and TP-10 (GND).
- Press CAL 0% switch.
- Adjust R508 so that voltmeter reads 0 V ±1 mV.

2. Zero point

- Connect DC voltmeter between TP-3 and TP-10 (GND).
- Short TP-6 with TP-10 (GND).
  SW2-1 allows TP-6 to be used as an input terminal for adjustment.
- Press CAL AC 100% switch.
  Pressing the CAL AC 100% switch causes IC U84 gain to be multiplied by approximately 1.
- Adjust R511 so that voltmeter reads 0 V ±1.2 mV.

3. Gain (multiplied by 1)

- Connect DC voltmeter between TP-3 and TP-10 (GND).
- Supply +2.500 V from standard DC voltage generator to TP-6.
- Press CAL AC 100% switch.
  IC U84 gain is multiplied by approximately 1.
- Adjust R510 so that voltmeter reads -2.500 V ±2.5 mV.

4. Gain (multiplied by 2.5)

- Connect DC voltmeter between TP-3 and TP-10 (GND).
- Apply +1.000 V to TP-6.
- Press CAL PRGM switch.
  Pressing the CAL PRGM switch causes IC U84 gain to be multiplied approximately 2.5.
- Adjust R509 so that voltmeter reads -2.500 V ± 2.5mV.

NOTE: After adjustment, return DIP SW2-1 to OFF, then press reset switch on rear panel.

C) Adjusting the digital voltmeter

- Preparation -

- Place monitor mode in OUTPUT.
- Set short socket of jumper connector J1 to position 0.
  TP-7 now functions as an input terminal for adjustment instead of a check terminal.

1. DC meter zero point

- Select monitor meter to DC mode.
- Short TP-7 with TP-10 (GND).
- Adjust R506 so that DVM reads +0.00 V.

2. DC meter gain

- Apply +8.00 V from standard DC voltage generator to TP-7.
- Adjust R507 so that DVM reads +8.00 V ±0.01 V.

3. AC meter zero point

- Select monitor meter to AC mode.
- Apply +0.20 V to TP-7.
- Adjust R505 so that DVM reads 0.20 Vp ±0.01 Vp.

4. AC meter gain

- Apply +8.00 V to TP-7.
- Adjust R504 so that DVM reads 8.00 Vp ±0.02 Vp.

5. AC meter gain check

- Make sure that when DVM is supplied with -8.00 V, it reads 8.00 Vp±0.02 Vp.
- Make sure that when DVM is supplied with a sinusoidal wave of 0.707 Vrms (150 kHz) from AC oscillator, it reads 1.00 Vp ±0.05 Vp.

NOTE: After adjustment, return short socket of jumper connector J1 to position 1.

D) Adjusting the clock

- Connect frequency counter to TP-1, and place frequency counter in period measurement mode.
- Adjust variable capacitor C100 so that frequency counter reads 999.9940 to 999.9990 ms.

NOTE: This adjustment must be performed at a room temperature of 25°C

ADJUSTMENT LOCATION – FM AMP PCBA –

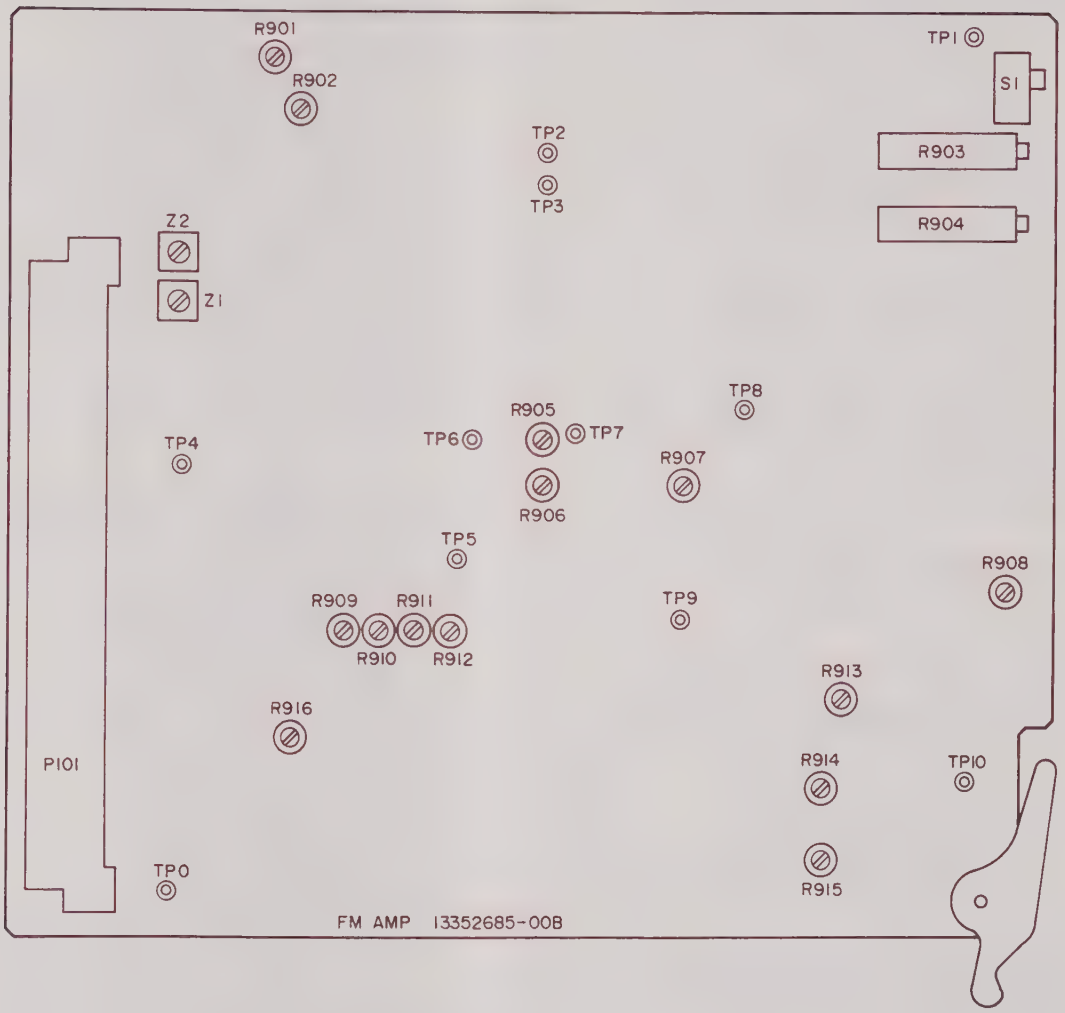

4-2-3 Adjusting the FM AMPLIFIER

- Preparation -

Set the controls of the XR-5000/7000 as listed below unless otherwise noted:

Level shift switch ..... OFF
Input range ..... 1.0 Vp
Output level ..... 0 Vp
Bandwidth ..... High band
CAL ..... OFF
Input/output zero shift 0%
Tape speed ..... 38 cm/s

A) Adjusting the recording section

Set DIP switches SW2-2 and -3 on MAIN MPU board to ON, then press reset switch on rear panel.

Keep the control settings described above unless otherwise noted.

1. Input amplifier (IC U13-1) offset

- Connect DC voltmeter between TP-4 and TP-0 (GND).
- Select input range to 0.1 Vp.
- Apply 0 V to the input.
- Adjust R909 so that voltmeter reads 0 V ±1 mV.

2. Input amplifier (IC U13-2) offset

- Connect DC voltmeter between TP-5 and TP-0 (GND).
- Select input range to 0.1 Vp.
- Apply 0 V to the input.
- Adjust R910 so that voltmeter reads 0 V ±1 mV.

3. Input zero shift amplifier (IC U31-1) offset

- Connect DC voltmeter between TP-10 and TP-0 (GND).
- Press CAL 0% switch.
  When the CAL 0% switch is pressed, SW2-2 causes the CPU to change the input zero shift of the FM amplifier forcibly to zero. Note that the zero shift of the FM amplifier does not refer to the zero shift value displayed on the EL screen. The CAL function is disabled.
- Adjust R915 so that voltmeter reads 0 V ±2 mV.

4. Input amplifier (IC U12-2) offset

- Connect DC voltmeter between TP-6 and TP-0 (GND).
- Select input range to 1.0Vp.
- Apply 0 V to the input.
- Adjust R911 so that voltmeter reads 0 V ±1 mV.

5. Input zero shift gain

- Connect DC voltmeter between TP-6 and TP-0 (GND).
- Press CAL +100% switch.When the CAL+100% switch is pressed, SW2-2 causes the CPU to change the input zero shift of the FM amplifier forcibly to +100% (+1 V).
  The CAL function is disabled.
- Apply -1.0 V to the input.
- Adjust R912 so that voltmeter reads 0 V ±1 mV (because of voltage offset).

6. Center frequency

- Connect frequency counter between TP-1 and TP-0 (GND) or to MONITOR-OUT BNC.
  SW2-3 enables measurement of the V/F monitor frequency (carrier frequency) of the monitor channel at MONITOR OUT.
- Press CAL 0% switch.
  The CPU causes the input zero shift to be zero.
- Apply 0V from the standard DC voltage generator to the input.
- Adjust R902 so that the frequency counter reads 108 kHz ±200Hz.
- Adjust R904 so that the frequency counter reads 108 kHz ±25Hz.

7. Degree of modulation
(±40% modulation)

- Connect the frequency counter between TP-1 and TP-0 (GND) or to MONITOR-OUT BNC.
- Press CAL 0% switch.
- Supply +1.000 V from standard DC voltage generator to the input.
- Adjust R901 so that frequency counter reads 151.2 kHz ±50 Hz.
- Make sure that when -1.000 V is applied, the frequency counter reads 64.8 kHz ±100 Hz.

B) Adjusting the reproduction section

Set DIP switch SW2-2 and -3 on MAIN MPU board to ON.

Keep the control settings described on page 4 unless otherwise noted.

1. F/V converter zero point
(4.8 and 9.5 cm/s)

- Connect DC voltmeter between TP-7 and TP-0 (GND).
- Set R905, R906, R907, and R916 to approximate midpoint.
- Apply 0 V to the input.
- Set tape speed to 4.8 and 9.5 cm/s alternately.
- Adjsut R916 so that the absolute value of the two voltage levels (one at 4.8 cm/s and the other at 9.5 cm/s) are equal.
  That is, adjust for $|V_{9.5}| = |V_{4.8}|$ where
  For example: $V_{9.5}$ = +5 mV, $V_{4.8}$ = -5mV.

2. Reproduction filter zero point
(38 cm/s)

- Connect DC voltmeter between TP-7 and TP-0 (GND).
- Set tape speed to 38 cm/s.
- Apply 0 V to the input. (Also make sure that carrier frequency at MONITOR-OUT is 108 kHz ±20 Hz).
- Adjsut R906 so that voltmeter reads 0 V ±1 mV.

3. Reproduction filter zero point
(2.4 cm/s)

- Connect DC voltmeter between TP-7 and TP-0 (GND).
- Set tape speed to 2.4 cm/s.
- Apply 0 V to the input.
- Adjust R905 so that voltmeter reads 0 V ±1 mV.

4. Reproduction gain adjustment

- Connect DC voltmeter between TP-7 and TP-0 (GND).
- Set tape speed to 38 cm/s.
- Apply +1.000 V to the input. (Also make sure that carrier frequency at MONITOR OUT is 151.2 kHz ±20 Hz.)
- Adjsut R907 so that voltmeter reads -1 V ±3 mV.

5. Output zero shift amplifier (IC U31-2) offset

- Connect DC voltmeter between TP-8 and TP-0 (GND).
- Apply 0 V to the input. (Also make sure that voltage TP-7 is 0 V ±1 mV. If it is not, fine adjust input voltage for approximately 0 V.)
- Press CAL 0% switch. When the CAL 0% switch is pressed, SW2-2 causes the CPU to change the output zero shift forcibly to zero.
- Adjust R914 so that voltmeter reads 0 V ±2 mV.

6. Output zero shift amplifier (IC U19-2) gain

- Connect DC voltmeter between TP-8 and TP-0 (GND).
- Apply +1.000 V to the input. (Also make sure that V/F monitor frequency (Carrier frequency) at MONITOR OUT is 151.2 kHz ±50Hz.)
- Press CAL DC +100% switch. When the CAL DC +100% switch is pressed, SW2-2 causes the CPU to change the output zero shift forcibly to -100% (-1 V).
- Adjust R913 so that voltmeter reads 0 V ±2 mV (because of voltage offset).

7. Output amplifier (IC U24) offset

- Connect DC voltmeter between TP-9 and TP-0 (GND).
- Press CAL 0% switch (The output zero shift be set to zero.)
- Apply 0 V to the input. (Also make sure that voltage at TP-8 is 0 V ±1 mV. If it is not, fine adjust input voltage for approximately 0 V.)
- Adjust R908 so that voltmeter reads 0 V ±1 mV.

C) Adjusting the erase trap

- Connect oscilloscope between TP-1 and TP-0 (GND).
- Enable erase function.
- Set bandwidth to WB-G1.
- Set input range to REC OFF.
- While recording forward (REC/FWD) to tape erased with bulk eraser CH-M5, adjust erase trap Z2 so that erase signal (at 800 kHz) is minimum.

NOTE: After adjustment, return DIP switches SW-2 and -3 on MAIN MPU to OFF, then press reset switch on rear panel.

ADJUSTMENT LOCATION – BIAS MIXER PCBA –

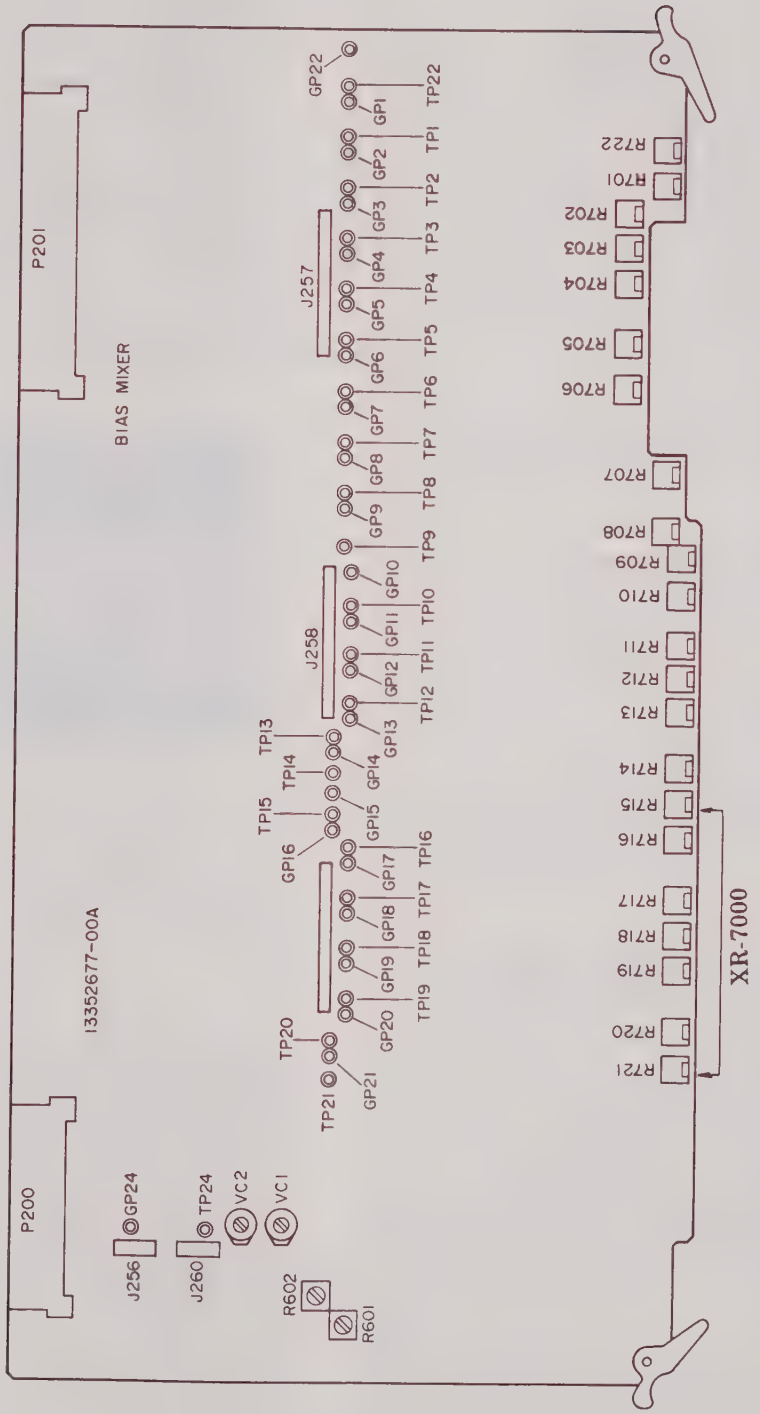

4-2-4 Adjusting the BIAS MIXER PCBA

A) Adjusting the erase section

1. Erase current (for forward recording)

- Connect oscilloscope between TP-24 and GP-24 (GND).
- Temporarily set R601 to midpoint.
- Enable erase function.
- ◦ Adjust trimmer capacitor VC1 so that voltage display is maximum during forward recording.
- ◦ Adjust R601 so that voltage display is 3 Vp-p ±0.5 Vp-p.
  (Note the erase current is 600 mAp-p ±100 mAp-p.)

2. Erase current (for reverse recording, optional)

- ◦ Enable reverse recording by SYSTEM key.
- Keep R601 as is.
- Enable erase function.
- ◦ Adjust trimmer capacitor VC2 so that voltage display is maximum during reverse recording. (Do not adjust R601.)

3. Erase check voltage (for self test)

- Connect DC voltmeter to pin B7 of connector P200.
- ◦ Adjust R602 so that voltmeter reads 1 V ±10 mV during forward recording.
- ◦ After adjustment, run self test on MISC functions and ensure that erase display appears to be OK.

B) Adjusting and checking the recording section

1. Checking the record current (for WB-G1)

- Connect oscilloscope between TP-1 and GP-0 (GND).
- Set bandwidth to WB-G1.
- Set tape speed to 2.4 cm/s.
- Make sure that voltage display is 200 mVp-p ±20mVp-p during forward recording (Note that the recording current is 20 mAp-p±2 mAp-p.)

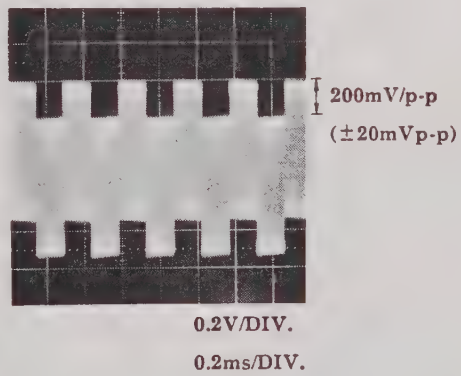

Voltage waveform displayed on the oscilloscope screen.

Fig. 4-1

2. Checking the record current (for the HIGH BAND)

- Set bandwidth to HIGH BAND.
- Set tape speed to 2.4 cm/s.
- Make sure that voltage display is 100 mV ±10 mVp-p during forward recording.

3. Adjusting the bias current (for FM data channels)

- Connect AC millivoltmeter between TP-1 of FM amplifier and TP-0 (GND).
- Set tape speed to 76 cm/s.
- Set bandwidth to WB-G1.
- Press CAL DC+100% switch. Pressing the DC+100% switch changes the carrier frequency to 151.2 kHz, thus allowing it to be used as a band edge frequency (150 kHz).
- Adjust R701 to R721 for overbias value of -2 dB ±1.5 dB during forward recording.

Channels and Variable Resistors List

CH1 →	R701	CH12 →	R712
CH2	R702	CH13	R713
CH3	R703	CH14	R714
CH4	R704	CH15	R715
CH5	R705	CH16	R716
CH6	R706	CH17	R717
CH7	R707	CH18	R718
CH8	R708	CH19	R719
CH9	R709	CH20	R720
CH10	R710	CH21	R721
CH11	R711		

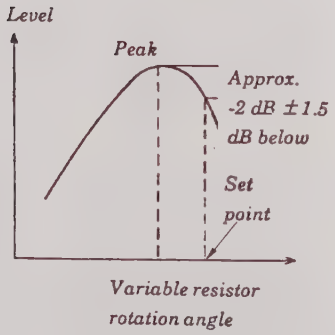

4. Adjusting the bias current (for memo channel)

- Connect oscilloscope between TP-22 and GP-22.
- Adjust R722 so that voltage display is 1 Vp-p ±0.2 Vp-p during forward recording.

ADJUSTMENT LOCATION – DISPLAY MPU PCBA –

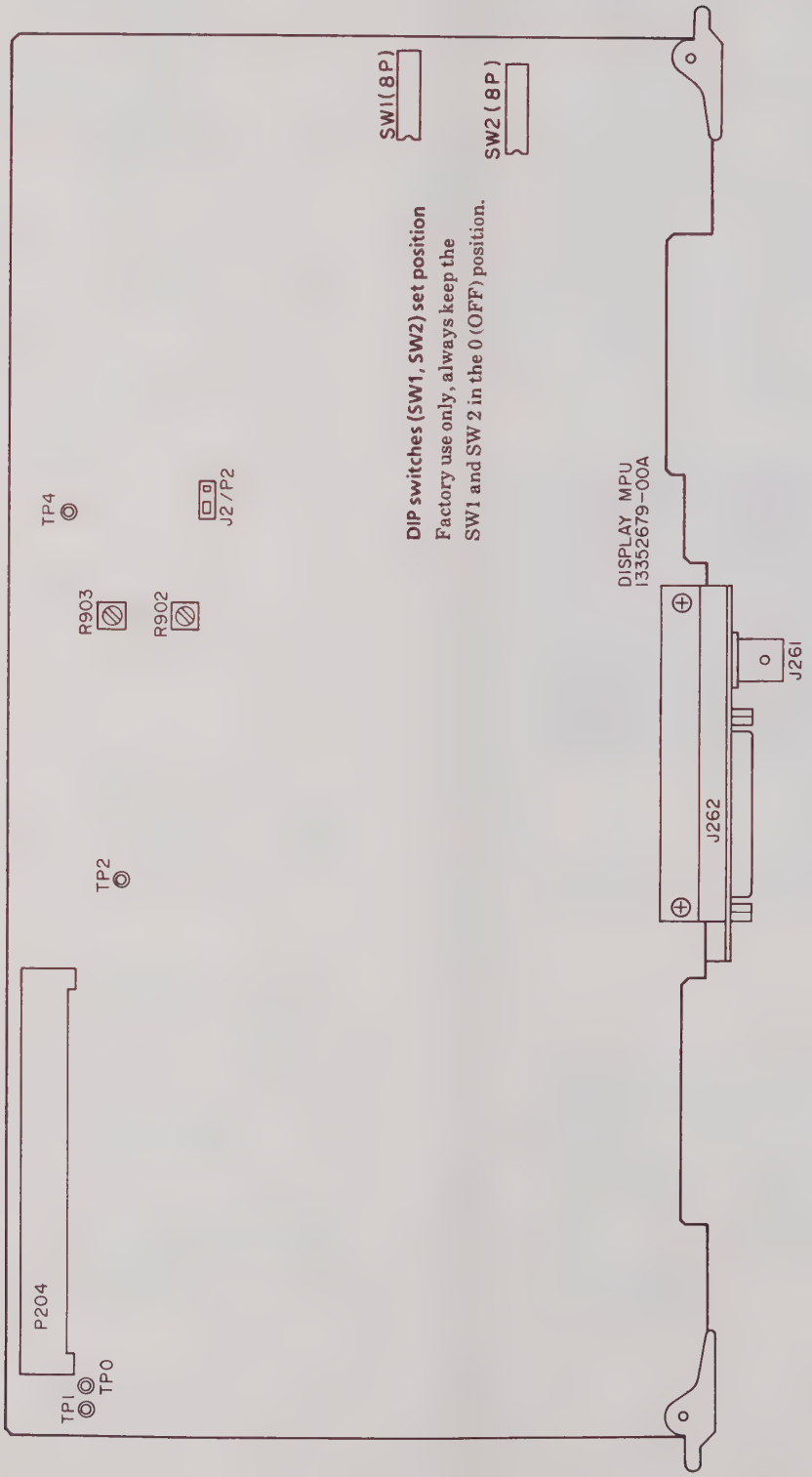

4-2-5 Adjusting the DISPLAY MPU PCBA

- Preparations -

Set the controls of the XR-5000/7000 as listed below unless otherwise noted.

Tape speed ..... 76 cm/s
Monitor mode ..... SOURCE
Monitor meter AC/DC ..... DC
Input zero shift 0%
EL display waveform display mode:
- Data No. 256
- Sampling rate ..... 20 μs
- FP 0
- Window 256
- Trigger ..... Live
- Waveform display ..... Single

- Set DIP switch SW1-1 on DISPLAY MPU board to ON, then press reset switch on rear panel. The EL screen changes to the adjustment menu and %-display appears at the bottom right corner of the screen.
- Keep the control settings described above unless otherwise noted.

A) Zero point

- Set short socket of jumper connector JP2 of DISPLAY MPU board to position 0.
  Waveform display mode changes to single (1 channel), and a signal can be entered from the external input terminals.
- Apply 0V to BNC connector J261 (external input terminal) on rear panel.
- Adjust R903 so that %-display at the bottom right corner is 0 ±2.5%.

B) Level

- Set short socket of jumper connector JP2 to position 0.
- Apply ±1.000 V to external input terminals.
- Adjust R902 so that %-display is ±100 ±2.5%.

C) Zero point (for the monitor)

- Set short socket of jumper connector JP2 to position 1 (normal mode).
- Apply 0 V to input BNC. (Also make sure that voltage at MONITOR OUT is 0 V ±5 mV.)
- Adjust R901 so that %-display is 0 ±2.5%.

D) Checking the operation

- Set short socket of jumper connector JP2 to position 0.
- Change waveform display mode to dual (2 channels) by entry key.
- Apply 0 V, then ±1 V to external input terminals.
- Make sure that upper waveform display remains within ±1 dot on +100%, 0%, -100% scale on the EL screen.

NOTE: After adjustment, return DIP switch SW1-1 to OFF and press reset switch on rear panel then return short socket of jumper connector JP2 to position 1.

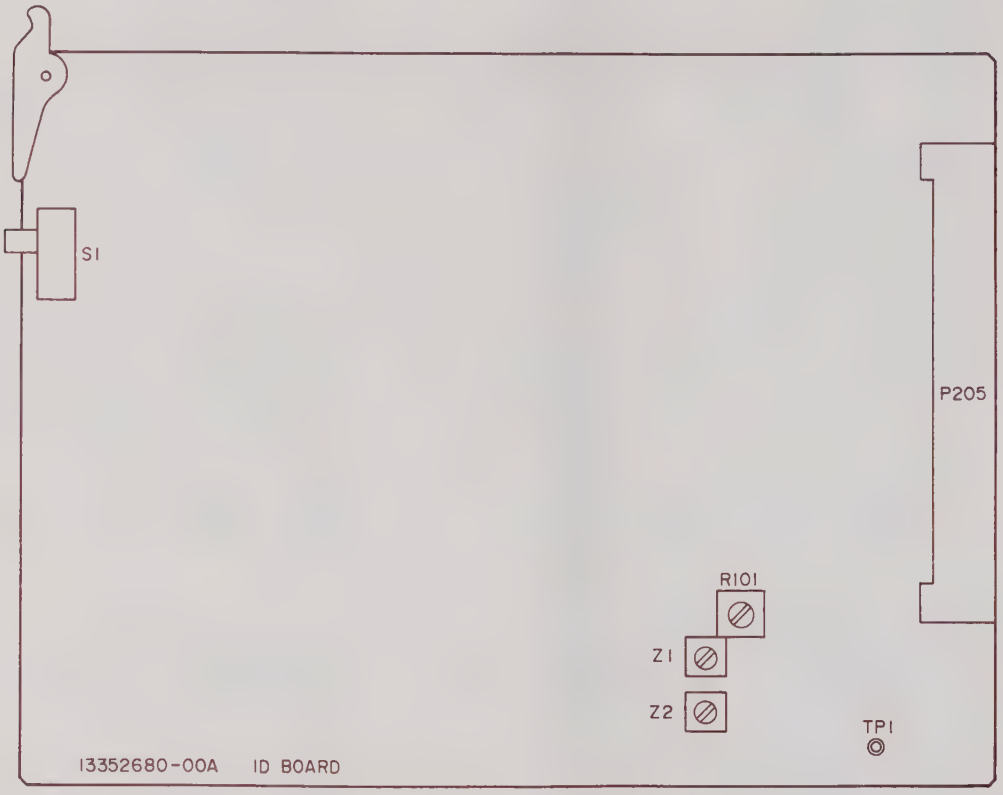

4-2-6 Adjusting the ID BOARD

A) Adjusting the ID gain

- Connect oscilloscope between TP-1 and TP-0 (GND).
- Set slide switch S1 of ID board to INT (INTERNAL ID) position.
- Set tape speed to 19cm/s.
- Enable rease function.
- On ID preset screen, set PRIORITY of 13 CH (21 CH for the XR-7000) to "COUNTER" ID.
- Adjust R101 so that the reproduced ID waveform is 8 to 9Vp-p during forward recording.

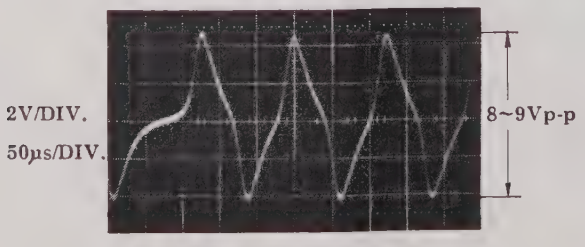

Fig. 4-2 Waveform

ADJUSTMENT LOCATION – TTP CONTROL PCBA –

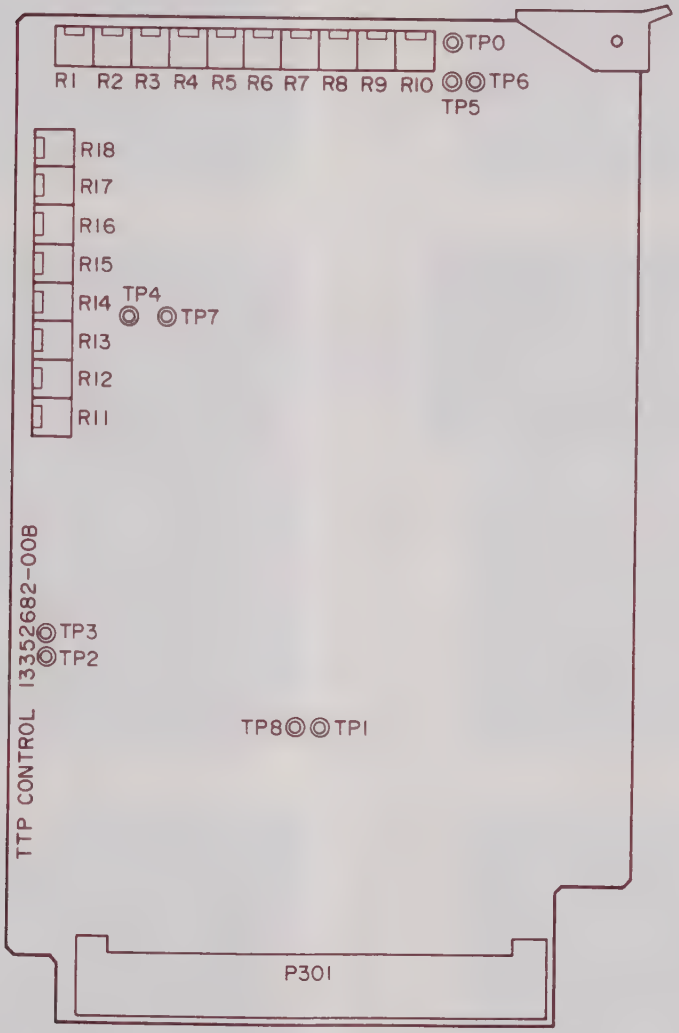

4-2-7 Adjusting the TTP CONTROL PCBA

NOTE: Use dedicated oscilloscope probe during this adjustment.

A) Adjusting the MOIRE SERVO circuit (Wow and flutter)

1. Tape speed 76cm/s and 38cm/s

- Connect oscilloscope to TP-6.
- Set tape speed to 38cm/s.
- Adjust R1 for minimum jitter in displayed waveform when tape is running forward.

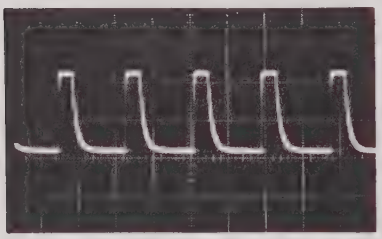

2V/DIV.
10μs/DIV.

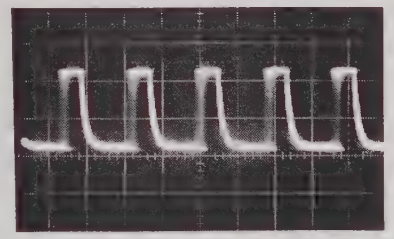

Good waveform -A

Wrong waveform - B

Fig. 4-3

2. Tape speeds 19 cm/s and 9.5 cm/s

- Set tape speed to 9.5 cm/s.
- Adjust R2 for minimum jitter in displayed waveform when tape is running forward.

Tape speed	Standard frequency (TP-2)	Flutter adj. resistors	Test point
76 cm/s 38 cm/s	108.921 kHz 54.460 kHz	R1 R1 ..... ADJ	TP-6 TP-6
19 cm/s 9.5 cm/s	27.230 kHz 13.615 kHz	R2 R2 ..... ADJ	TP-6 TP-6

NOTE: When one potentiometer is used for 2 different tape speeds, adjust it with lower tape speed.

3. **Tape speed 4.8 cm/s and 2.4 cm/s**
   - Connect oscilloscope to TP-6.
   - Set tape speed to 4.8 cm/s, then to 2.4 cm/s.
   - Adjust R11 (at tape speed 4.8 cm/s), then R12 (at tape speed 2.4 cm/s) so that displayed waveform has duty cycle of 4:1 during forward run.

Good waveform - A

Wrong waveform - B

Fig. 4-4

   - Connect oscilloscope to TP-4 and TP-7 (trapezoid wave shaping). Then, connect it to resistor R45 (composite wave check).
   - Adjust R15 (at tape speed 4.8 cm/s) and R16 (at tape speed 2.4 cm/s) so that displayed waveforms are almost trapezoid during forward run. Also make sure that ripple in composite wave produced from these waveforms is minimized. (See below waveforms)

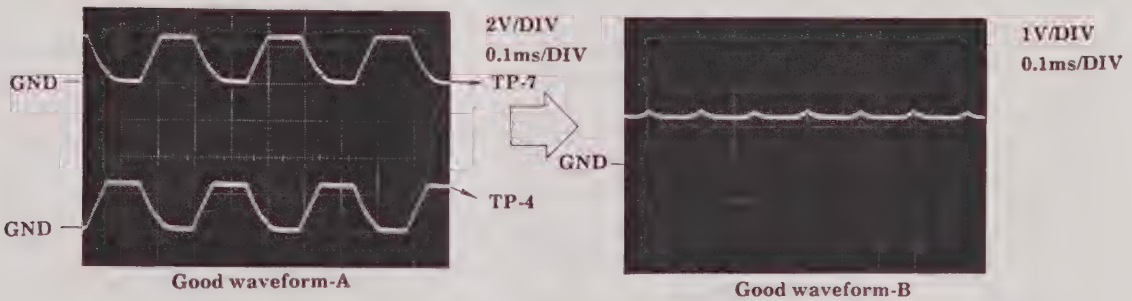

Good waveform-A

Good waveform-B
(Composite wave)

Fig. 4-5

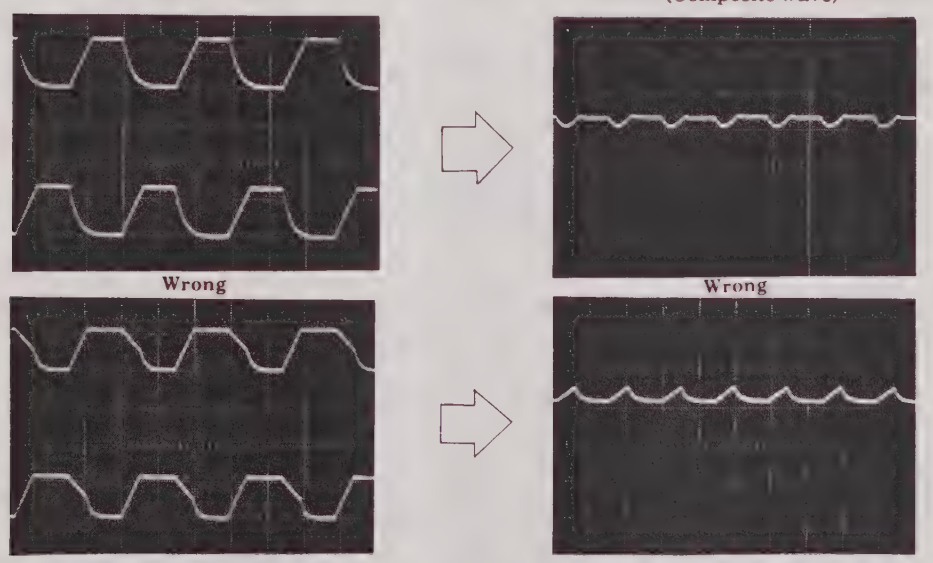

Wrong waveform - A

Wrong Waveform - B
(Composite wave)

Fig. 4-6

- Connect oscilloscope to TP-6.
- Set tape speed to 2.4 cm/s.
- Adjust R3 for minimum jitter in displayed waveform when tape is running forward. (See Fig. 4-1).

4. Tape speed 1.2 cm/s
   - Connect oscilloscope to TP-6, and tape speed to 1.2 cm/s.
   - Adjust R13 so that displayed waveform has duty cycle of 4:1 (See Fig. 4-4).

   - Connect oscilloscope to TP-4 and TP-7 (trapezoid wave shaping). Then connect it to resistor R45 (composite wave check).
   - Adjust R17 so that displayed waveform is almost trapezoid during forward run (See Fig. 4-5). Also, make sure that ripple in composite wave produced from there waveforms is minimized.

   - Connect oscilloscope to TP-6.
   - Adjust R4 for minimum jitter in displayed waveform when tape is running forward (See Fig. 4-1).

Tape speed	Standard frequency (TP-2)	Adjustment resistor	Test point	Flutter adj. resistor	Test point
4.8 cm/s	6.807 kHz	R11 (Duty cycle) R15 (Waveform)	TP-6 TP-4 (TP-7)	R3	TP-6
2.4 cm/s	3.403 kHz	R12 (Duty cycle) R16 (Waveform)	TP-6 TP-4 (TP-7)	R3 ... ADJ	TP-6
1.2 cm/s	1.702 kHz	R13 (Duty cycle) R17 (Waveform)	TP-6 TP-4 (TP-7)	R4 ... ADJ	TP-6

NOTE: When one potentiometer is used for 2 different tape speeds, adjust it with lower tape speed.

B) Adjusting tape servo circuit

NOTE: Make this adjustment after moire servo adjustment.

- Connect oscilloscope to TP-6.
  Specify channel 14 (XR-5000) or channel 11 (XR-7000) as tape servo channel using SYSTEM key.
- Record tape servo carrier in record forward mode. Then rewind and reproduce tape. Adjust resistors R6 to R8 for minimum jitter in displayed waveform during forward run.

NOTE: When one resistor is used for 2 different tape speeds, adjust it with lower tape speed. No tape servo function is available at tape speed 1.2cm/s.

Tape speed	Flutter adjustment resistors	Test point
76 cm/s 38 cm/s	R6 R6 ..... ADJ	TP-6
19 cm/s 9.5 cm/s	R7 R7 ..... ADJ	TP-6
4.8 cm/s 2.4 cm/s	R8 R8 ..... ADJ	TP-6

ADJUSTMENT LOCATION – TTP I/F PCBA –

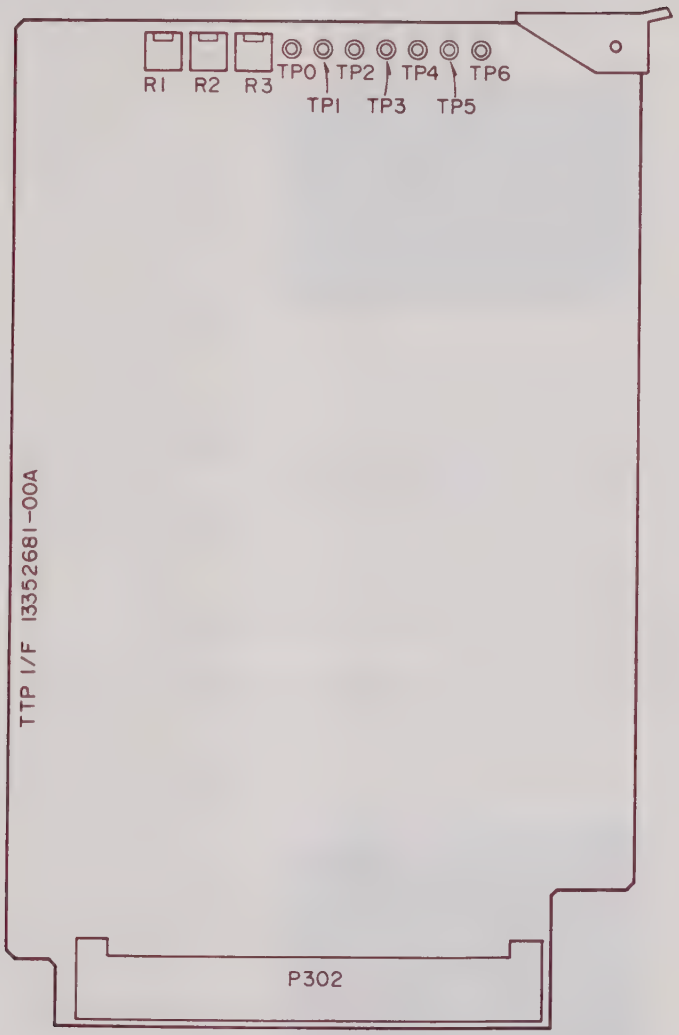

4-2-8 Adjusting the TTP/IF PCBA

A) Adjusting the BOT sensor output

- Connect oscilloscope between TP-2 and TP-0 (GND).
- Mount tape and press FR key to rewind it to its beginning. When tape reaches its beginning, BOT sensor receives light passing through clear-leader tape.
- Adjust R1 so that amplitude of diisplayed waveform is 3.5Vp-p or more (See below)

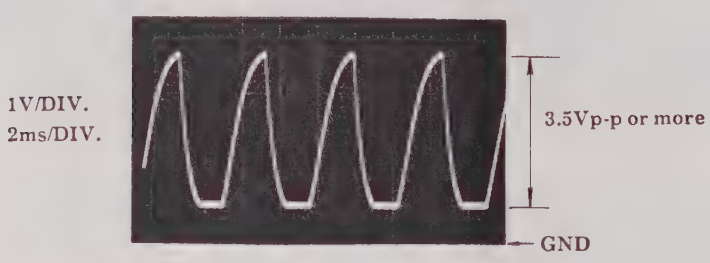

Fig. 4-7

B) Adjusting the EOT sensor output

- Connect oscilloscope between TP-3 and TP-0 (GND).
  Press FF key to fast-forward tape to its end.
- Adjust R2 so that amplitude of displayed waveform is 3.5Vp-p or more.

C) Adjusting the reel pulse sensor output

- Connect oscilloscope between TP-1 and TP-0 (GND).
- Set tape speed to 19cm/s.
- Adjust R3 so that amplitude of displayed waveform is 4Vp-p or more when tape is running forward.

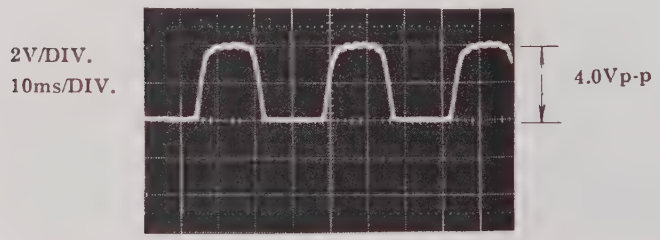

Fig. 4-8

ADJUSTMENT LOCATION – TTP DRIVER PCBA –

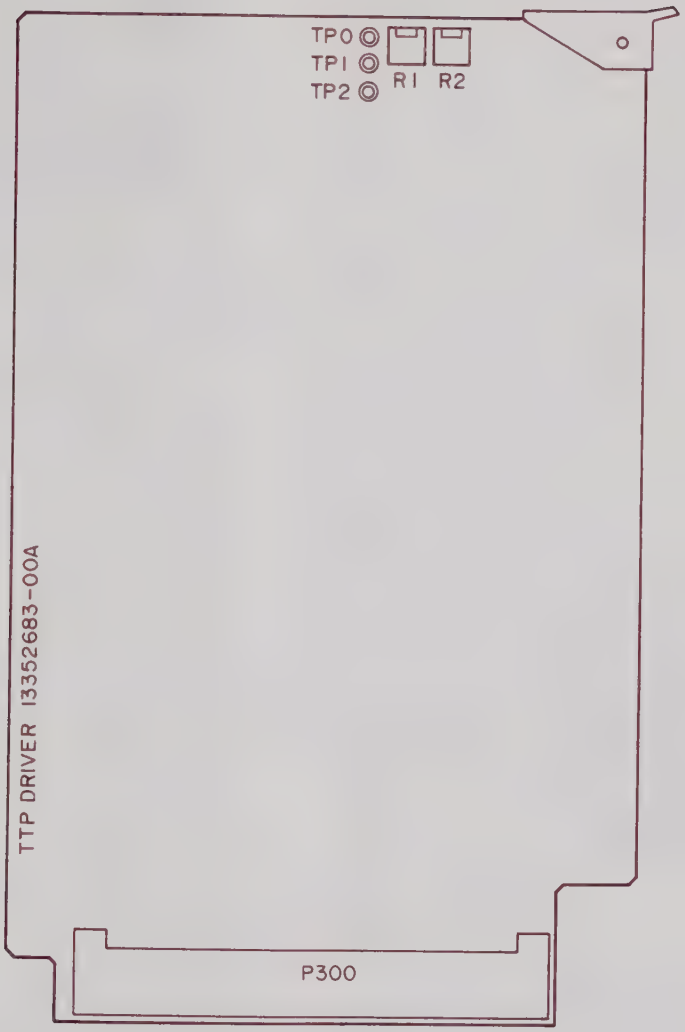

4-2-9 Adjusting the TTP DRIVER PCBA

A) Adjusting supply reel-side tape tension

- Place tape tension arm in loading state with no tape mounted.

NOTE: For how to set up this condition, refer to Section 3 of Maintenance and Adjustment of Mechanical Sections.)

- Remove erase haed. Mount tension gauge (parts No. 17853968-00) in position shown in photograph below.
- Mask holder (LED) so that light does not pass through BOT/EOT marker.

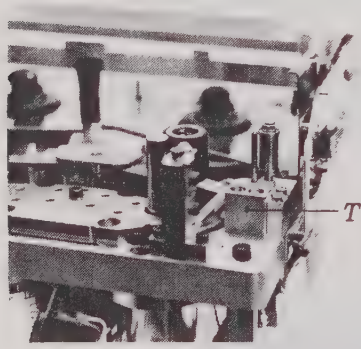

Fig. 4-9

- Adjust R1 so that in forward run mode, supply reel motor almost starts to rotate.

B) Adjusting take-up reel-side tape tension

- Mount tension gauge in position shown in photograph below.

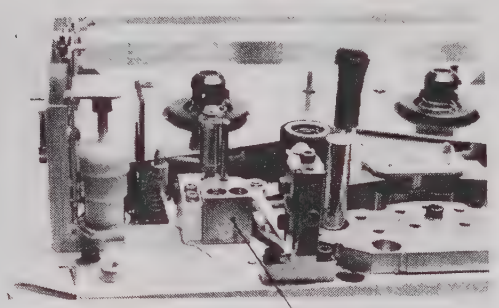

Fig. 4-10

- Adjust R2 so that in forward run mode, take-up reel motor almost starts to rotate.

SECTION 5

MECHANICAL

5-1 Exploded view and parts list
5-2 Check and adjustment - Mechanical -
- 5-2-1 How to dismount the tape transport unit with caution
- 5-2-2 How to place the tape transport unit in loading state without inserting a cassette
- 5-2-3 Replacing the major parts (Assemblies)
  - A) Parts to be replaced at overhall
  - B) Replacing the belt
  - C) Replacing the pinch roller
  - D) Replacing the bearings
  - E) Replacing the magnetic head assembly
  - F) Replacing the capstan motor
  - G) Replacing the reel motor
  - H) Replacing pinch roller motor elevator ass'y
  - I) Replacing the loading DC motor
  - J) Replacing the tension arm
- 5-2-4 Check and adjusting the tape transport unit
  - A) Micro-switches location and operation -1
  - B) Description of micro-switches operation
- 5-2-5 Pinch roller pressure
- 5-2-6 Check and adjusting tape running state
  - A) Guide roller height adjustment
  - B) Checking tape running
- 5-2-7 Brake torque
- 5-2-8 Checking the tape transport unit
  - A) Tape run test
  - B) Tape speed
  - C) SN ratio
  - D) Frequency response
  - E) Skew (Dinamic/static)
  - F) Capstan belt tension
  - G) Wow and flutter

SECTION 5 MECHANICAL

5-1 EXPLODED VIEW AND PARTS LIST-1

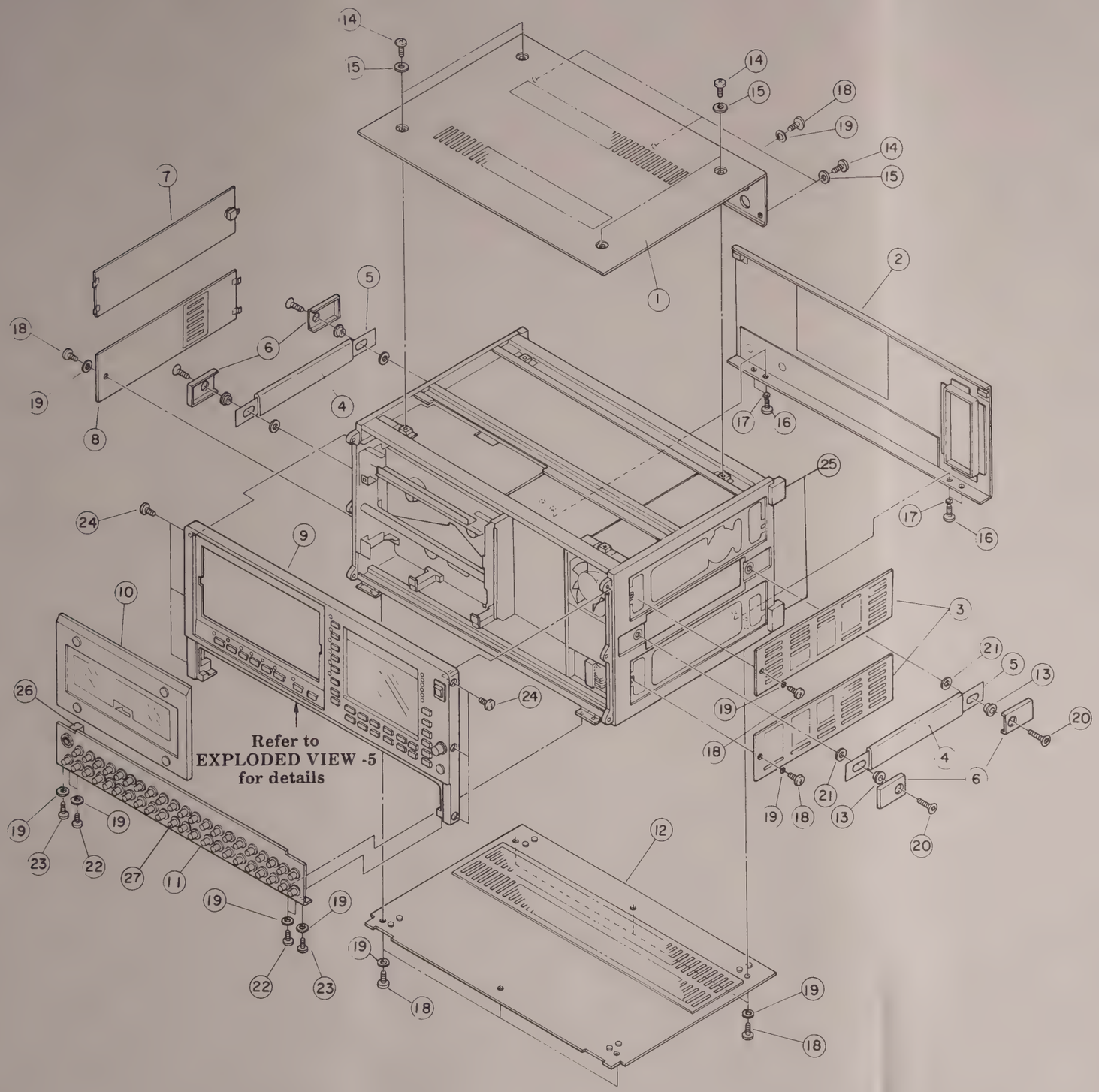

REF. NO.	PARTS NO.	DESCRIPTION	Q'TY
1	16153429-00	Cover, T	1
2	16153426-00	Cover, R	1
3	16153432-00	Cover, SR	1
4	16787038-00	Handle	2
5	16767130-00	Handle, Plate	2
6	16767129-00	Handle, Holder	4
7	16153430-00	Cover, SLT	1
8	16153431-00	Cover, SLB	1
9	16145584-00	Panel, FRONT Ass'y	1
10	16145591-00	Cassette Panel Ass'y, 5000	1
	16145591-01	Cassette Panel Ass'y, 7000	1
11	16145583-00	Panel (IO) Ass'y	1
	16145582-00	Panel (IO) Ass'y	1
12	16153427-00	Cover, B	1
13	16767128-00	Collar, Handle	4
14	16411406	Binding Screw 4 x 6 B BNM	7
15	16496062	Washer, Maylar 4 x 8 x 0.35	7
16	16411006	Binding Screw 2.6 x 6 B BNM	4
17	16496421-02	Washer, Maylar 2.6 x 5 x 0.2	4
18	16411306	Binding Screw 3 x 6 B BNM	15
19	16496057-00	Washer, Maylar 3.6 x 0.35	21
20	16498691	Screw, Collar M6 x 12	4
21	16496006	Flat Washer 6 x 13 x 1.0	4
22	16498613-00	Binding Screw 3 x 69 (BLK)	4
23	16498613-01	Binding Screw 3 x 8 (BLK)	2
24	16412412	Binding Screw 4 x 12 BC	6
25	16787910-00	Rubber Foot, R	4
26	13151484	JACK, 3P64M	1
27	13101682	BNC, Connector	
		(XR-5000)	29
		(XR-7000)	43

EXPLODED VIEW-2

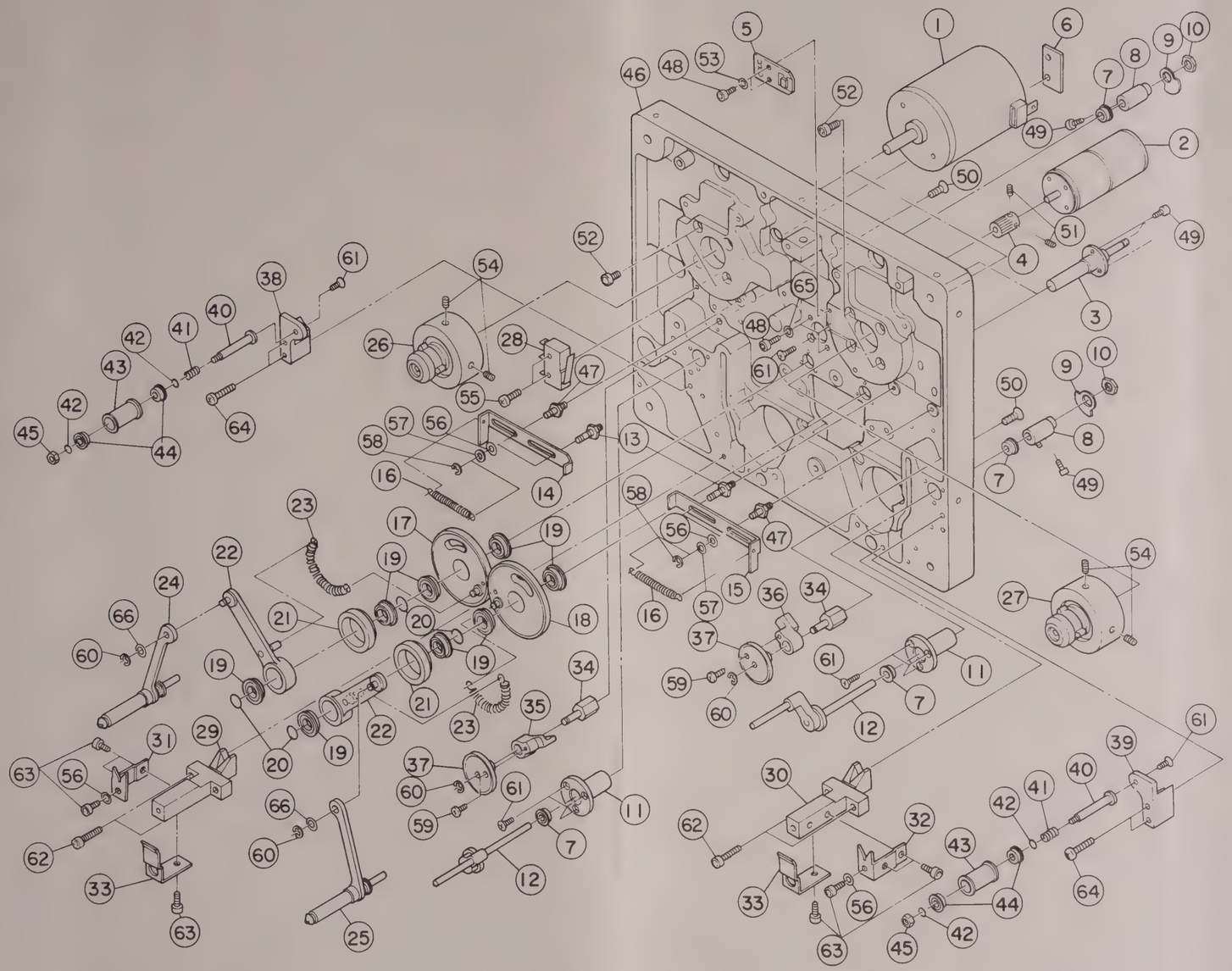

REF. NO.	PARTS NO.	DESCRIPTION	Q'TY
1	14734024	Motor	2
2	14734025-00	Motor, DC	1
3	16767068-00	Shaft, Gear	1
4	16767071-00	Gear, Drive	1
5	15552700-00	Reel Sensor PCBA	1
6	16767047-00	Nut, Plate	1
7	16030900-00	Bearing (MF63ZZS)	4
8	16792407-00	Stopper, Shaft	2
9	16767037-00	Disc, Slit	2
10	16490046-00	Nut (M5-5)	2
11	16730641-00	Holder, Tension	2
12	17000600-00	Arm Ass'y, Tension	2
13	16803745-00	Shaft Lever (A)	2
14	16767035-00	Lever, Slide (L)	1
15	16767036-00	Lever, Slide (R)	1
16	16381369-00	Spring T, Slide Lever	2
17	16792405-00	Gear, Load (L)	1
18	16792406-00	Gear, Load (R)	1
19	16030890-00	Bearing (MF106ZZS)	8
20	16359553-00	Spacer	4
21	16787889-00	Collar, Load Gear	2
22	16792404-00	Arm, Loading	2
23	16381376-00	Spring T, Loading Arm	2
24	17031000-00	Roller (L) Ass'y, Loading	1
25	17031001-00	Roller (R) Ass'y, Loading	1
26	17061073-00	Reel Table (L) Ass'y	1
27	17061074-00	Reel Table (R) Ass'y	1
28	13221095	Switch, Micro (SS-01-GL)	1
29	16730649-00	Guide, Loading (L)	1
30	16730650-00	Guide, Loading (R)	1
31	16767080-00	Bracket, Guide (L)	1
32	16767081-00	Bracket, Guide (R)	1
33	16767086-00	Bracket, Guide (T)	2
34	16767076-00	Shaft, Gear (B)	2
35	16792413-00	Arm, Gear (BL)	1
36	16792414-00	Arm, Gear (BR)	1
37	16730643-00	Gear, Tension (B)	2
38	16757472-00	Base, Guide Roller (L)	1
39	16757471-00	Base, Guide Roller (R)	1
40	16767138-00	Shaft Guide Roller	2
41	16385430-00	Spring C, Guide (H)	2
42	16359386-00	Spacer	4
43	16767139-00	Roller, Guide (H)	2
44	16030900-00	Bearing (MF63ZZS)	4
45	16492080	Nylon Nut (M2.6)	2
46	16153405-00	Base, TTP	1
47	16803746-00	Shaft, Lever (B)	2
48	16460206	Screw, Cap M2 x 6	5
49	16460205	Screw, Cap M2 x 5	11
50	16420306	Screw, Counter-sunk M3 x 6 S ZMC	2
51	16450003	Screw, Set M2.6 x 3	2
52	16460306	Screw, Cap M3 x 6	4
53	16496052-00	Washer, Mayler 2.1 x 4 x 0.35	2
54	16450306	Screw, Set M3 x 6	4
55	16410212	Screw, Bind M2 x 12 S ZMC	2
56	16496093	Washer, Flat 2.6 x 5 x 0.5	6
57	16496421-01	Washer, Flat 2.6 x 5 x 0.1	4
58	16351130	E Ring 2J	4
59	16410205	Screw, Bind M2 x 5 S ZMC	2
60	16351150	E Ring 2.5J	4
61	16420205	Screw, Counter-sunk M2 x 5 S ZMC	9
62	16460012	Screw, Cap M2.6 x 12	4
63	16460006	Screw, Cap M2.6 x 6	8
64	16470016	Screw, Pan; Sems M2.6 x 16	4
65	16496074	Washer, Flat 2 x 4.3 x 0.4	3
66	16496002	Washer, Flat 3 x 8 x 0.5	2

EXPLODED VIEW-3

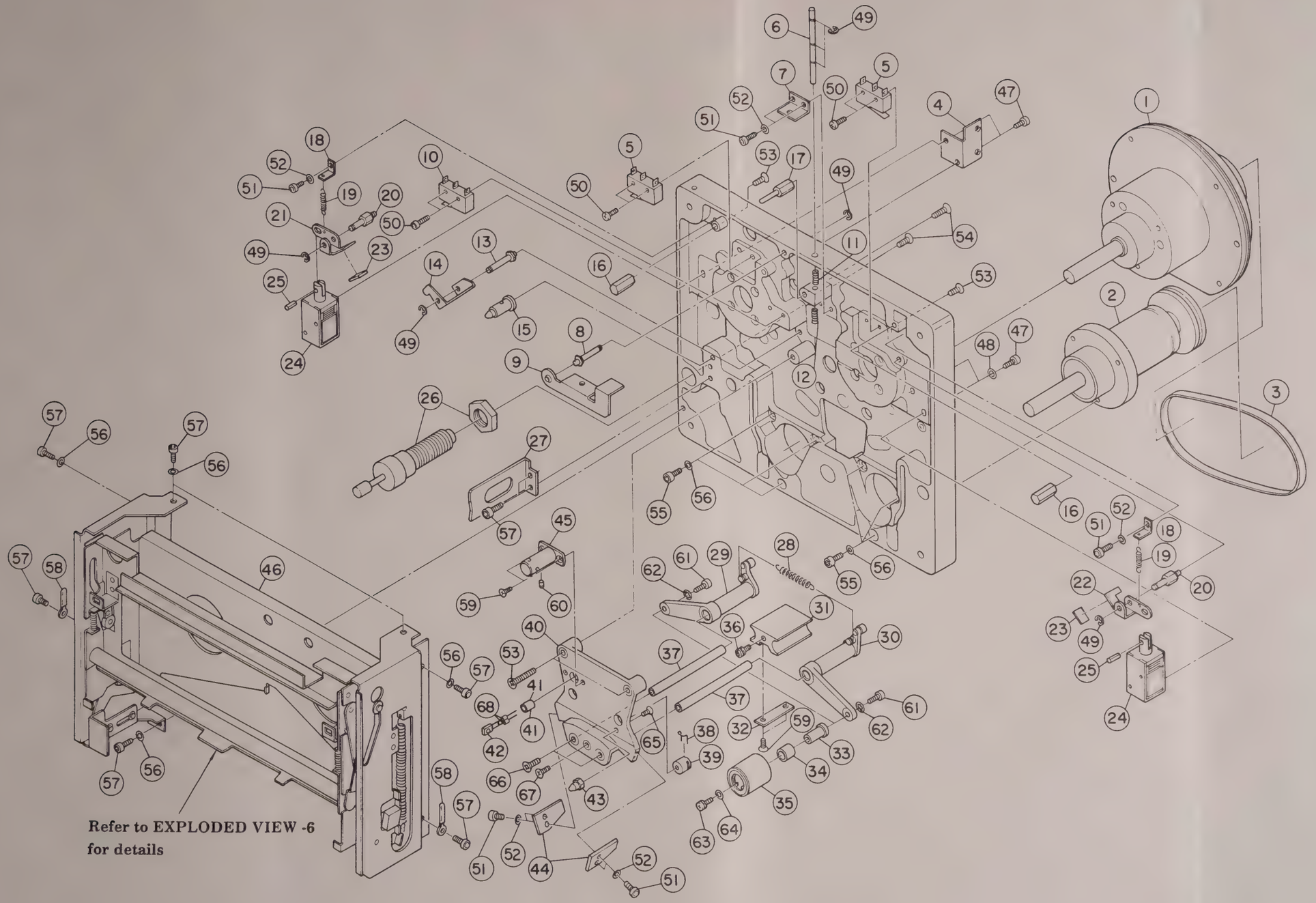

REF. NO.	PARTS NO.	DESCRIPTION	Q'TY
1	17011230-00	Capstan Motor Ass'y	1
2	17011240-00	Capstan Ass'y	1
3	16082830-00	Belt, Capstan	1
4	16767124-00	Bracket, Moire Amp PCBA	1
5	13221098	Switch, Micro (SS-01GL-F)	2
6	16767115-00	Shaft, MEJ	1
7	16767114-00	Bracket, MEJ	1
8	16767116-00	Pin, MEJ	1
9	16767113-00	Lever, MEJ	1
10	13221095	Switch, Micro (SS-01-GL)	1
11	16385424-00	Spring C, MEJ 1	1
12	16385425-00	Spring C, MEJ 2	1
13	16767111-00	Pin, ITS	1
14	16767112-00	Bracket, ITS	1
15	16767042-00	Pin	1
16	16767085-00	Pin (H)	2
17	16767048-00	Reset Pin, Brake	1
18	16767046-00	Spring Hanger, Brake	2
19	16381370-00	Spring T, Brake	2
20	16767084-00	Shaft, Brake	2
21	16767044-00	Bracket, Brake (L)	1
22	16767045-00	Bracket, Brake (R)	1
23	16787960-00	Brake Shoe	2
24	14771003-00	Solenoid, Latching (RFM-B)	2
25	16353290	Spring Pin	2
26	16322454-00	Dumper (FA-0712C-SKI)	1
27	16757482-00	Bracket, Open	1
28	16381375-00	Spring T, Arm	1
29	16792416-00	Arm (L), Pinch Roller	1
30	16792415-00	Arm (R), Pinch Roller	1
31	16757501-00	Guide, Pinch Arm	1
32	16730646-00	Rack, Pinch Arm	1
33	16767043-00	Pibot, Pinch Roller	2
34	16730644-00	Collar, Pinch Roller	2
35	17040810-00	Pinch Roller Ass'y	2
36	13189444-00	Screw, Solderless	1
37	16767073-00	Shaft, Pinch Arm	2
38	16392084-00	Spring, Clip	1
39	16730655-00	Holder, Clip	1
40	16153415-00	Base, Gear (A)	1
41	16730652-00	Stopper, LED	1
42	13419364	LED (EL-45F)	1
43	16767032-00	Guide, Cassette	1
44	16787896-00	Guide, Gear Side	2
45	16757475-00	Holder, LED	1
46	17967590-00	Cassette Comp Ass'y	1
47	16460006	Screw, Cap M2.6 x 6	4
48	16496093	Washer, Flat 2.6 x 5 x 0.5	2
49	16351130	E Ring 2J	7
50	16410210	Screw, Bind M2 x 10 S ZMC	6
51	16460205	Screw, Cap M2 x 5	8
52	16496074	Washer, Flat 2 x 4.3 x 0.4	8
53	16420315	Screw, Counter-sunk M3 x 15 S ZMC	4
54	16420320	Screw, Counter-sunk M3 x 20 S ZMC	2
55	16460310	Screw, Cap M3 x 10	6
56	16496094	Washer, Flat 3 x 6 x 0.5	11
57	16460306	Screw, Cap M3 x 6	9
58	16322052	Clamper, Cord	2
59	16420204	Screw, Counter-sunk M2 x 4 S ZMC	4
60	16450203	Screw, Set M2 x 3	1
61	16460008	Screw, Cap M2.6 x 8	2
62	16496081	Washer, Lock A2.6	2
63	16470006	Screw, Pan; Sems M2.6 x 6	2
64	16496629	Washer, Flat 2.6 x 6.5 x 0.5	2
65	16420205	Screw, Counter-sunk M2 x 5 S ZMC	1
66	16420306	Screw, Counter-sunk M3 x 6 S ZMC	2
67	16421004	Screw, Counter-sunk M2.6 x 4 B BNM	1
68	13090138	Tube 0.7 x 0.25	2

EXPLODED VIEW-4

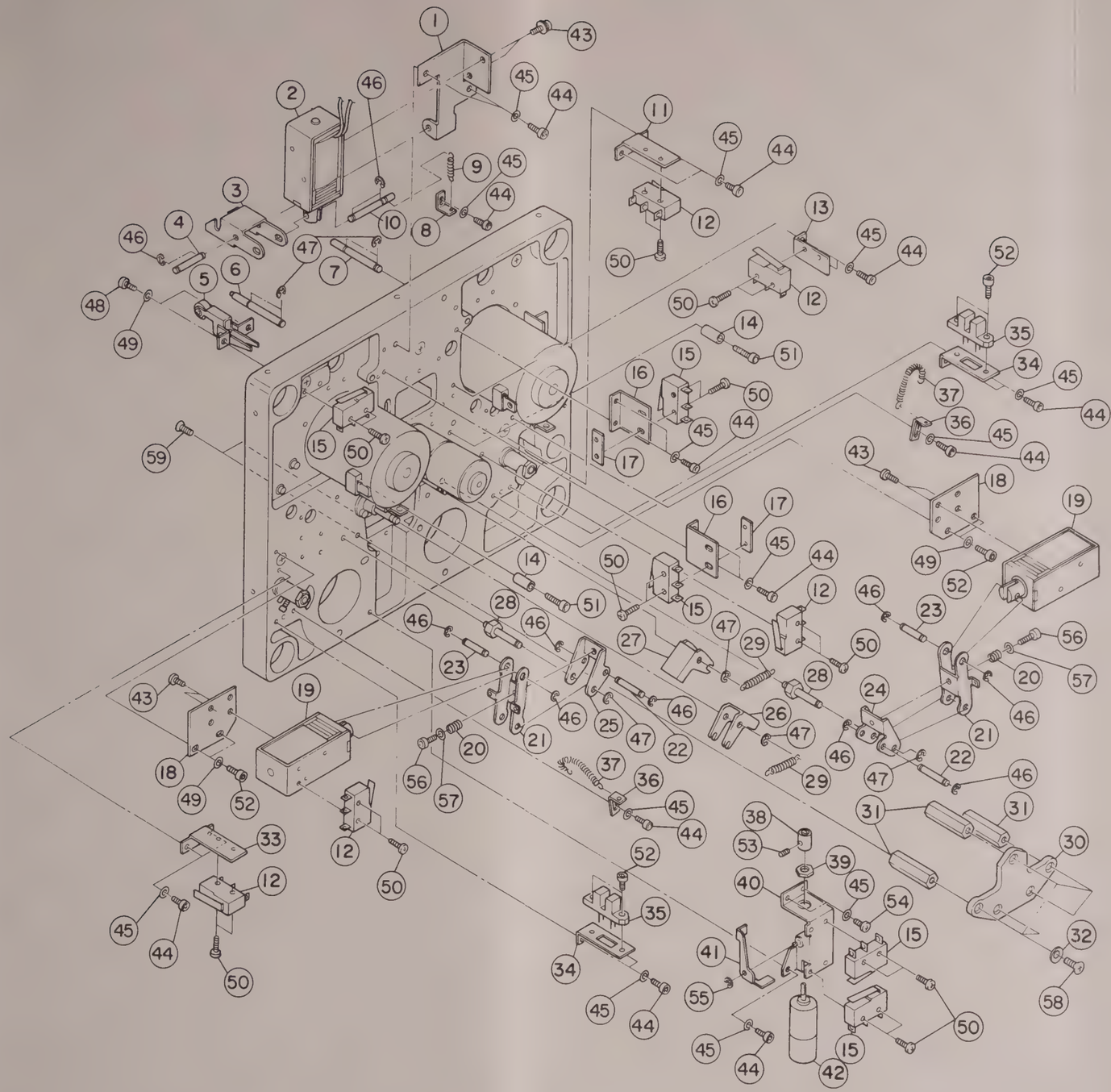

REF. NO.	PARTS NO.	DESCRIPTION	Q'TY
1	16767106-00	Bracket, Solenoid	1
2	14771005-00	Solenoid (RGH)	1
3	16767108-00	Bracket, LKB	1
4	16767109-00	Shaft, LKB	1
5	17081042-00	Rec Switch Ass'y	1
6	16767082-00	Shaft, Cassette	1
7	16767083-00	Shaft, Cassette Comp	1
8	16767110-00	Bracket, TSP	1
9	16381365-00	Spring T, LKB	1
10	16767107-00	Shaft, Solenoid EJ	1
11	16767040-00	Bracket, Micro Switch (L)	1
12	13221098	Switch, Micro (SS-01GL-F)	5
13	16767117-00	Bracket, LSW	1
14	16767069-00	Collar, Stopper	2
15	13221095	Switch, Micro (SS-01-GL)	2
16	16757477-00	Bracket, Micro Switch	2
17	16767047-00	Nut, Plate	2
18	16767049-00	Bracket, P-Solenoid	2
19	14771004-00	Solenoid, Latching (RFM-K)	2
20	16385428-00	Spring C, P Arm	2
21	16767089-00	Bracket, Solderless (A)	2
22	16767072-00	Shaft, Solderless (B)	2
23	16767078-00	Shaft, P-Solenoid	2
24	16767092-00	Bracket, Solderless (RB)	1
25	16767090-00	Bracket, Solderless (LB)	1
26	16767091-00	Bracket, Solderless (LC)	1
27	16767093-00	Bracket, Solderless (RC)	1
28	16767074-00	Shaft, P Lever	2
29	16381368-00	Spring T, P-Solenoid	2
30	16757481-00	Base, Gear (B)	1
31	16730647-00	Pole (M3 x 23)	3
32	16757474-00	Spacer	5
33	16767041-00	Bracket, Micro Switch (R)	1
34	16767038-00	Bracket, Sensor	2
35	13419361	Photo Sensor (GP1S01)	2
36	16767039-00	Hanger, Tension	2
37	16381373-00	Spring T, Tension	2
38	16730639-00	Gear, Pinch Motor	1
39	16490046-00	Nut (M5.5)	1
40	16767063-00	Bracket, Gear Motor	1
41	16767033-00	Arm, Sensor	1
42	14734026-00	DC Motor (SC12G-1200-TEA)	1
43	16470004	Screw, Pan; Sems M2.6 x 4	6
44	16460205	Screw, Cap M2 x 5	20
45	16496074	Washer, Flat 2 x 4.3 x 0.4	21
46	16351130	E Ring 2J	12
47	16351150	E Ring 2.5J	8
48	16460006	Screw, Cap M2.6 x 6	2
49	16496093	Washer, Flat 2.6 x 5 x 0.5	6
50	16410210	Screw, Bind M2 x 10 S ZMC	20
51	16460012	Screw, Cap M2.6 x 12	2
52	16460006	Screw, Cap M2.6 x 6	8
53	16450205	Screw, Set M2 x 5	1
54	16410205	Screw, Bind M2 x 5	1
55	16351120	E Ring 1.5J	1
56	16460212	Screw, Cap M2 x 12	2
57	16496000	Washer, Flat 2 x 6 x 0.4	2
58	16420306	Screw, Counter-sunk M3 x 6 S ZMC	5
59	16420308	Screw, Counter-sunk M3 x 8 S ZMC	3

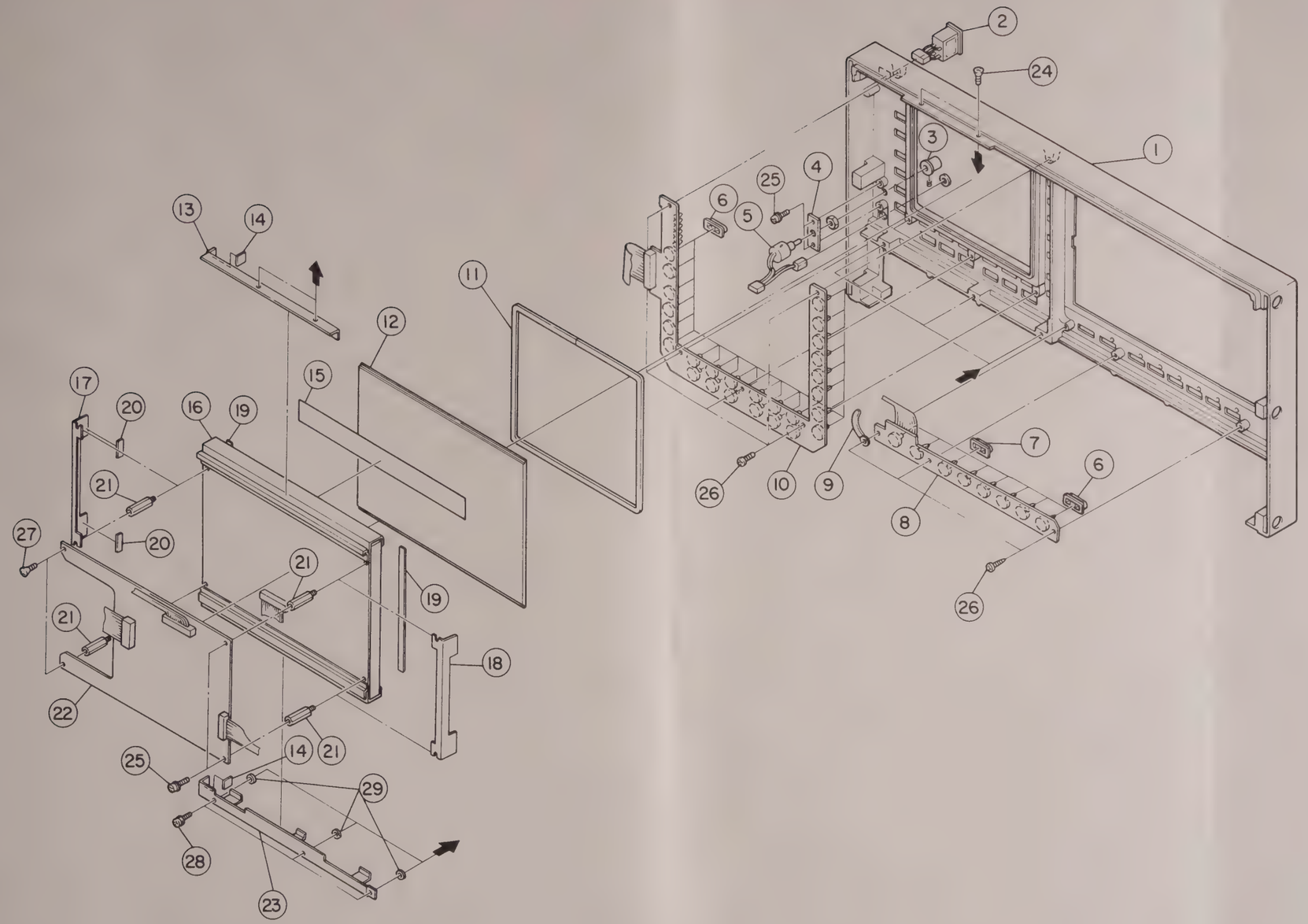
1
2
3
4
5
6
7
8
9
10
11
12
13
14
15
16
17
18
19
20
21
22
23
24
25
26
27
28
29

REF. NO.	PARTS NO.	DESCRIPTION	Q'TY
1	16145586-00	Panel, Front	1
2	17081041-00	Switch Ass'y, Power	1
3	16291030-00	Knob, B-12B	1
4	16757496-00	Bracket, Volume	1
5	17967589-00	Volume Ass'y, Speaker	1
6	16787909-00	Knob, Switch (GRY)	33
7	16787909-01	Knob, Switch (RED)	1
8	15552674-00	Operate SW PCBA	1
9	16322053	Clamper, Cord	1
10	15552675-00	Control SW PCBA	1
11	16787911-01	Packing	1
12	16145590-00	Panel, Acryl/EL	1
13	16767103-00	Bracket, T/EL	1
14	16787905-00	Cushion SB, EL	2
15	16757500-00	Dress, Plate/EL	1
16	15950640	Display, EL	1
17	16757494-00	Bracket, Side R/EL	1
18	16757495-00	Bracket, Side L/EL	1
19	10933399-00	Cushion V, EL	2
20	16787904-00	Cushion S, EL	2
21	16359557-00	Poll, R/EL	4
22	15552653-00	Front I/F PCBA	1
23	16757490-00	Bracket, B/EL	1
24	16421004	Screw, Counter-sunk M2.6 x 4 B BNM	2
25	16498579	Screw, Pan; Three Piece M3 x 6	4
26	16499230-01	Screw M3 x 6	8
27	16421306	Screw, Counter-sunk M3 x 6 B BNM	2
28	16470306	Screw, Pan; Sems M3 x 6 S ZMC	3
29	16496094	Flat Washer 3 x 6 x 0.5	3

EXPLODED VIEW-6

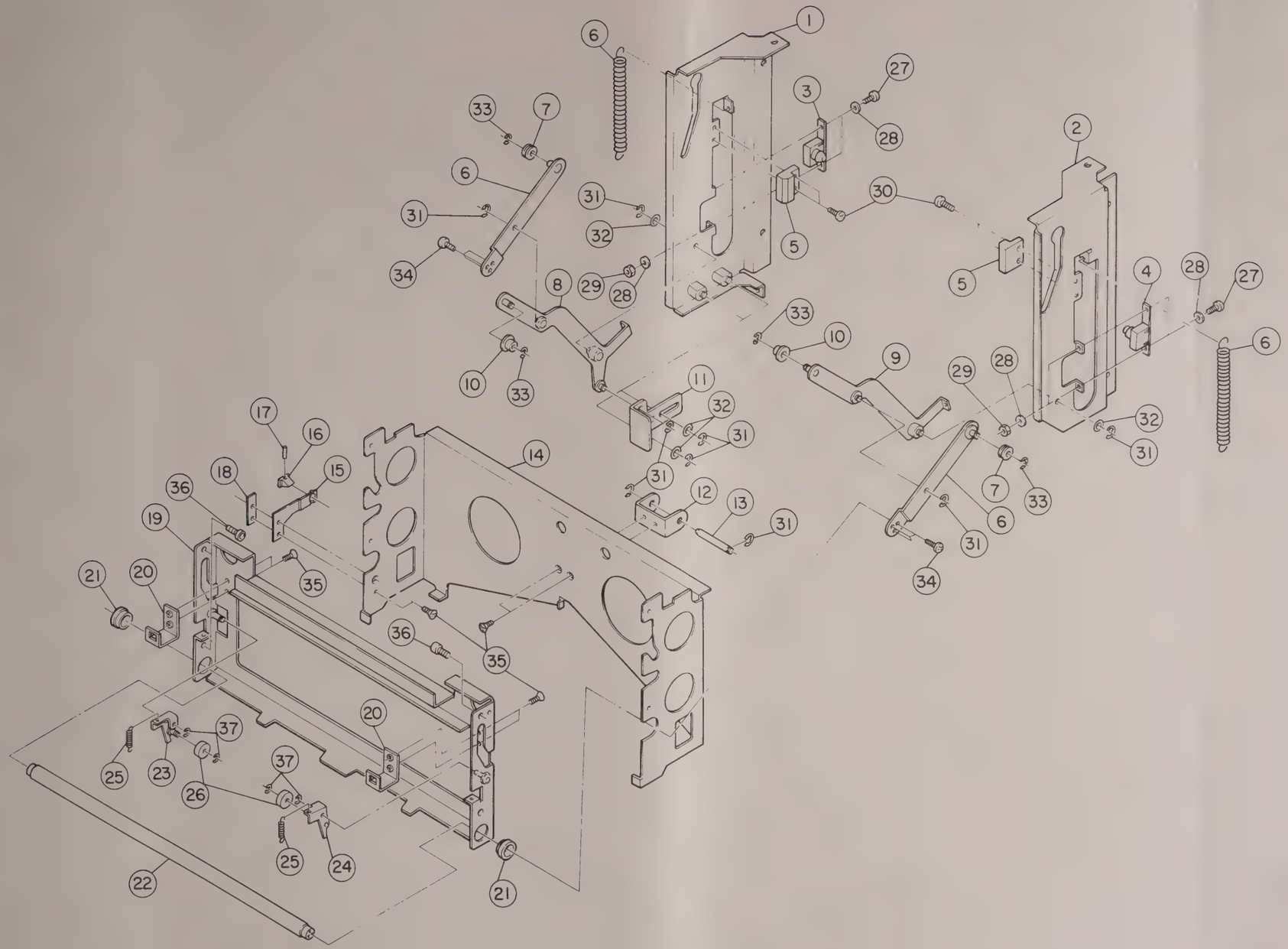

REF. NO.	PARTS NO.	DESCRIPTION	Q'TY
1	16757498-00	Bracket, Cassette Comp (L)	1
2	16757497-00	Bracket, Cassette Comp (R)	1
3	15552698-00	End Sensor PCBA (L)	1
4	15552698-01	End Sensor PCBA (R)	1
5	16787894-00	Guide, Side	2
6	16767054-00	Arm (A)	2
7	16787891-00	Roller (A)	2
8	16767064-00	Arm, Cassette Comp (BL)	1
9	16767065-00	Arm, Cassette Comp (BR)	1
10	16787892-00	Roller (B)	2
11	16767055-00	Bracket, Dumper	1
12	16767060-00	Bracket, Lock	1
13	16767061-00	Shaft, Lock	1
14	16767062-00	Bracket, Cassette Comp (U)	1
15	16392078-00	Spring, Leaf	1
16	16787898-00	Bush, Open	1
17	16353626	Pin ϕ1 x 6	1
18	16767057-00	Nut, Plate	1
19	16757479-00	Bracket, Cassette Comp (T)	1
20	16767050-00	Bracket, Panel	2
21	16787890-00	Collar, Roll Lever	2
22	16757483-00	Roll Bear	1
23	16767058-00	Bracket, Cassette Comp (L)	1
24	16767059-00	Bracket, Cassette Comp (R)	1
25	16381371-00	Spring T, Cassette	2
26	16787893-00	Roller, Cassette	2
27	16460205	Screw, Cap M2 x 5	4
28	16496074	Flat Washer 2 x 4.3 x 0.4	8
29	16490000	Hexagon Nut M2 B BNM	4
30	16411006	Screw, Bind M2.6 x 6 B BNM	4
31	16351150	E Ring 2.5J	9
32	16496017-00	Washer, Mayler HW753-01M	4
33	16351130	E Ring 2J	4
34	16499015	Screw, Pan M2 x 5 S ZMC	6
35	16420204	Screw, Counter-sunk M2 x 4 S ZMC	7
36	16460304	Screw, Cap M3 x 4	4
37	16351120	E Ring 1.5J	4

5-2-1 How to dismount the tape transport unit with caution

NOTE: When proceeding through the steps below, be careful not to damage the wiring and magnetic head surfaces.

1. Remove upper and lower covers by 4 screws on top, 9 screws at rear, 6 screws at bottom.

2. Removing the front panel by 3 screws at right, 3 screws at left, 2 black screws, 1 on each side at bottom.
   - Open BNC panel by pushing it down, then pulling it toward you. (Fig. 5-1)
   - Remove front panel by pulling it toward you. (You may have to pull it rather strongly for it is a bit stiff.)
   - Remove 4 cables from connectors on front panel.

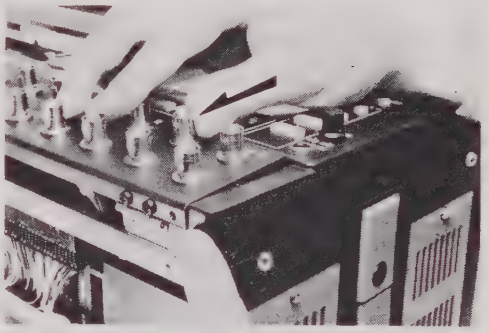

Fig. 5-1

3. Remove SUBDRIVER PCBA by two 5.5mm (0.22 in) nuts and 2 screws. (Fig. 5-2)

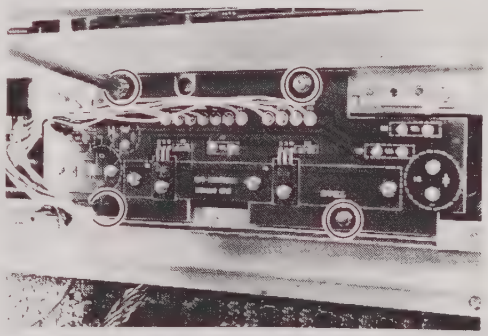

Fig. 5-2

4. Removing the BIAS MIXER PCBA
   - Remove the ID PCBA, DISPLAY MPU PCBA,then MAIN MPU PCBA.
   - Remove cables from BIAS MIXER PCBA (4 cables for XR-5000 and 5 cables for XR-7000).
   - Pull out cables through slot for control mother board. (Fig. 5-3)
   - Remove BIAS MIXER PCBA.

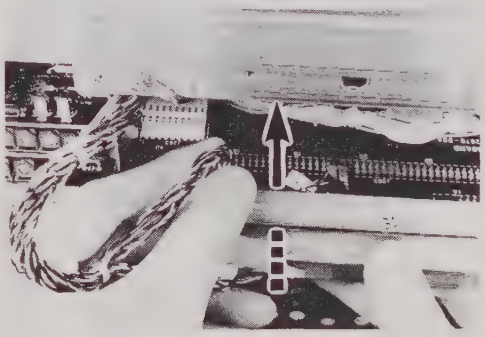

Fig. 5-3

5. Remove HEAD AMP below tape transport unit by 4 screws.(Fig. 5-4)
   - Remove connectors from HEAD AMP UNIT (5 connectors for XR-5000, 6 connectors for XR-7000).
     (Fig. 5-5). Righ photo is XR-5000.

6. Remove 3 cable connectors from SUB MOTHER Board (side of HEAD AMP). (Fig. 5-6)

7. Remove cables from two clamps tape transport unit so that when tape transport unit is dismounted, it will not be caught in any place.

8. Remove 4 screws, paying attention to two ground wires and two ground bands on the front surface of tape transport unit. (Fig. 5-7)

9. Dismount tape transport unit carefully.

   - **How to remount the tape transport unit**
     Reverse steps 1 and 8 above.

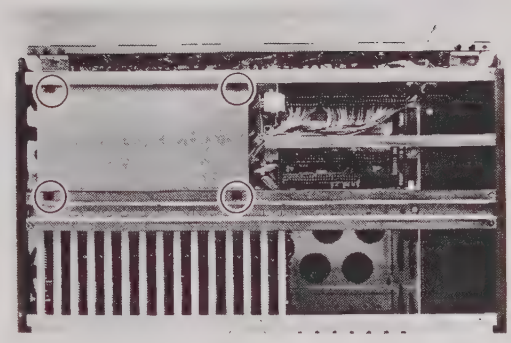

Fig. 5-4

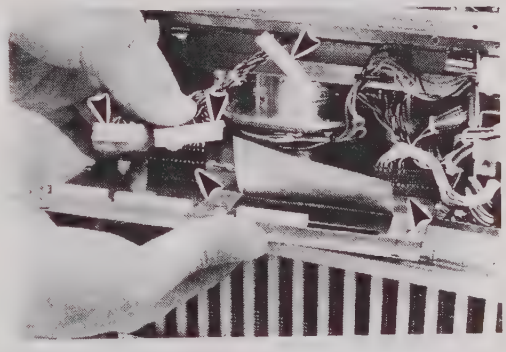

Fig. 5-5

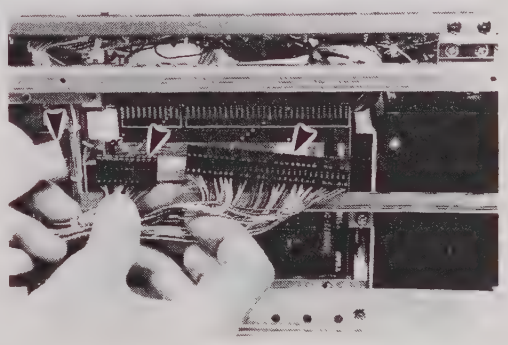

Fig. 5-6

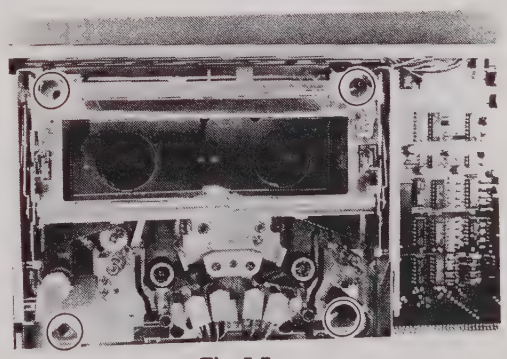

Fig. 5-7

5-2-2 How to place the tape transport unit in loading state without inserting a cassette

NOTE: When, separated tape transport unit from main body (XR-5000 or XR-7000), in this case, connect the by Extension cables (P/N 17854563-00, 17854564-00, and 17854565-00).

1. If only cassette panel was removed, hold down cassette sensor shaft.

2. If cassette compartment was dismounted or opened, hold down both cassette compartment shaft and cassette sensor shaft.(Fig. 5-8)

Fig. 5-8

3. To prevent light for BOT/EOT from passing, mask the holder (LED); the load arm and pinch roller will come out. Then put back right and left tape tension arms a bit inwardly simultaneously to keep reel motors from creeping. (Fig. 5-9)

4. Now tape transport unit is kept in loading state with no cassette inserted.

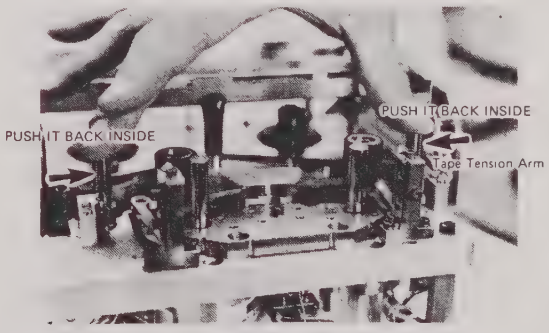

Fig. 5-9

5-2-3 Replacing the major parts (Assemblies)

NOTE: Use TEAC cleaner TZ-350 in cleaning the tape transport; do not use any other cleaning liquid.

A) Parts to be replaced at overhall

- Loading roller bearings: 4
  P/No. 16030740-00 (2)
  P/No. 16030920-00 (2)
- Guide roller bearings: 4
  P/No. 16030900-00
- Pinch roller assemblies: 2
  P/No. 17040810-00
- Pinch roller Motor DC: 1
  P/No. 14734026-00
- Capstan belt: 1 P/No. 16082830-00
  (For parts replacement, refer to descriptions of replacement of the respective part.)
- Loading motor DC: 1
  P/No. 14734025-00

B) Replacing the belt

NOTE: Mount correct capstan pulleys at the correct places. Those to be mounted at right and left are not interchangeable with each other.

- Dismount tape transport unit as directed in Section 5-2-1.
- Remove belt together with capstan pulley; do not detach and mount belt alone or belt may be damaged.
- Clean pulley and place new belt over pulley, then mount pulley with belt on shaft and fasten it with screw.
- Check belt tension.
- Check if tape runs normally.
- Mount tape transport unit.
- Check tape speed and SN ratio.
  (Mounting the tape transport unit must always be followed by this check.)

C) Replacing the pinch roller

- Remove front panel.
- Unscrew and replace pinch roller with new one, then fasten new one with set- screw.
- Check SN ratio and if tape runs normally.
- Mount front panel.

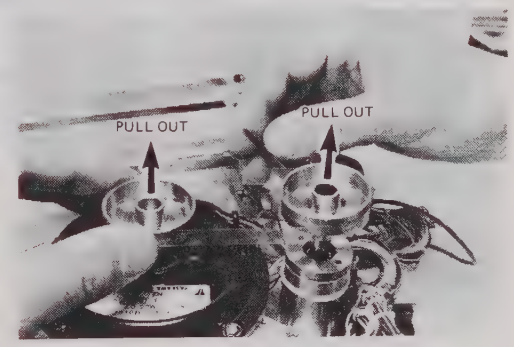

Fig. 5-10

D) Replacing the bearings

NOTE: Do not wipe off bearings with cloth, with cleaning liquid, or place them on smeared objects, or touch them with dirty hands.

1. Replacing the pinch roller bearing

- Replace pinch roller assembly as a whole. (Fig. 5-11)

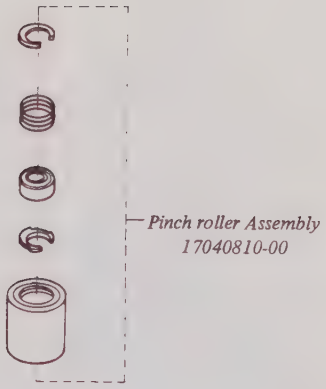

Fig. 5-11

2. Replacing the loading roller ass'y bearing

- Open cassette compartment and remove cassette panel.
- Remove loading roller cap.
- Wipe off shaft with cloth and cleaning liquid.
- While keeping 2 bearing shaft hole and shaft in parallel, mount bearing on shaft carefully. (Fig. 5-12)
- After replacement, check SN ratio.

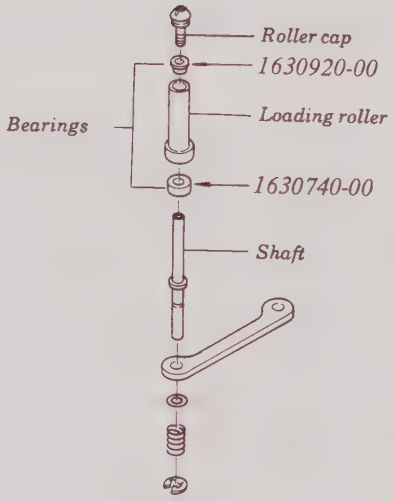

Fig. 5-12

3. Replacing the guide roller bearings

- Remove cassette panel and front panel.
- Remove guide roller nut, then upper bearing.
- Remove giude roller, then lower bearing.
- Wipe off guide roller shaft with cloth and cleaning liquid.
- Reverse steps above carefully to mount bearings. (Fig. 5-13)
- Proceed through steps above for other bearings.
- Adjusting guide roller height as directed in Section 5-2-6 of A).
- After replacement check SN ratio.

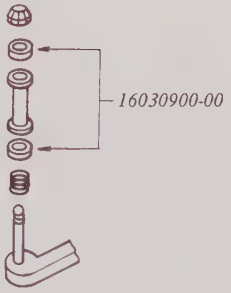

Fig. 5-13

E) Replacing the magnetic head assembly (Fig. 5-14)

- Dismount tape transport as directed in Section 5-2-1.
- Remove right-side guide bracket.
- Remove head by 3 screws.
- Clean head mount base.
- Mount head carefully and fasten it with screws.
- Make sure tape runs normally.
- Mount tape transport unit.
- Check SN ratio and frequency response.

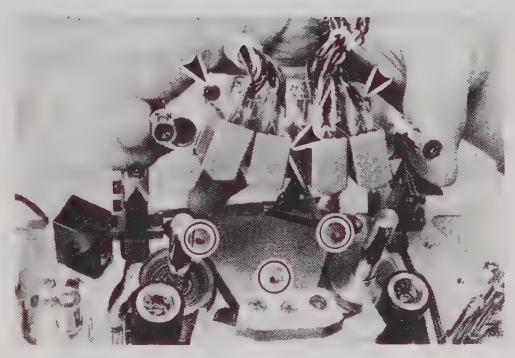

Fig. 5-14

F) Replacing the capstan motor (Fig. 5-15)

- Dismount tape transport unit as directed in Section 5-2-1.
- Attach protective paper on surface of magnetic head to protect it from scratches.
- Remove moire amplifier PCBA by 2 screws.
- Unclasp capstan motor wire harness.
- Loosen capstan motor mounting screws and remove belt.
- Set tape transport unit to face upward, then remove mounting screws from capstan motor.

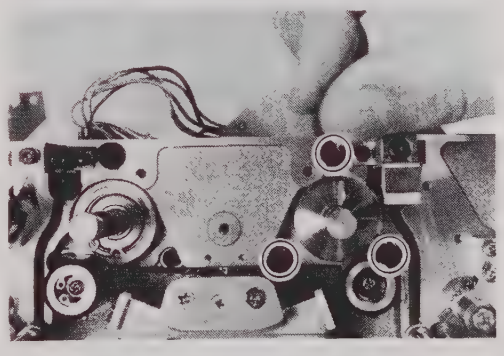

Fig. 5-15

- Check to see if there is mylar a sheet between capstan motor and mounting base, and if there is one, remember its exact position.
- Clean capstan motor mounting base and mount replacement capstan motor.
- Check that capstan motor is at right angle with mounting base, and if necessary, insert mylar sheet between capstan motor and mounting base to keep them at right angle exactly. (Fig. 5-16)
- Remove protective paper from head.
- Adjust capstan belt tension, see Section 5-2-8 of F).
- Mount tape transport unit.
- After replacement, check SN ratio and tape speed.

Fig. 5-16

G) Replacing the reel motor

- Dismount tape transport unit as directed in Section 5-2-1.
- Open cassette compartment.
- Remove reel table.
- Heat reel table brush terminals with soldering iron and unsolder leads.
- Remove 2 mounting screws from reel motor and take out.
- Mount and fasten replacement reel motor.
- Solder leads to motor brush terminals.

- Adjust height of reel table by height gauge and fasten reel table. (Fig. 5-17)
- Check to see if tape runs normally.
- Mount tape transport unit.
- After replacement, check SN ratio.

H) Replacing pinch roller motor elevator assembly

- Dismount tape transport unit as directed in Section 5-2-1.
- Attach protective paper on surface of magnetic head (Prevent scratch).
- Loosen capstan motor mounting screws a bit and remove capstan belt.
- Set tape transport unit to face upward and remove 3 mounting screws from capstan motor, then take out capstan motor.
- There may be a mylar sheet between capstan motor and mounting base to keep them exactly at right angle. If this is the case, remember exact position of mylar sheet.
- Remove pinch roller elevator motor assembly by 2 screws A and B. (Fig. 5-18)
- Rewire 6 leads to microswitch on replacement motor assembly.
- Reverse steps above to mount motor assembly.
- Make sure that microswitch operates with pinch roller protruding into locked position.
- Make sure that microswitch also operates with pinch roller in lowest position.
- If microswitch does not operate under conditions described above, reposition it so that it operates. (Fig. 5-19)
- Mount tape transport unit.

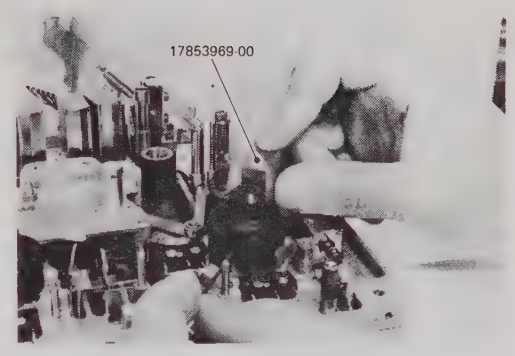

Fig. 5-17

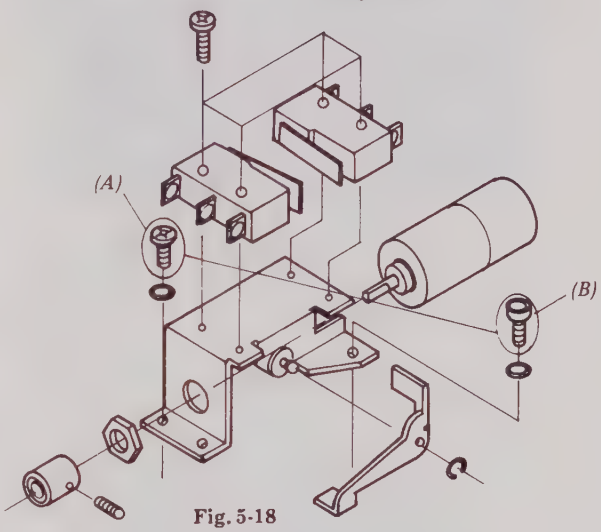

Fig. 5-18

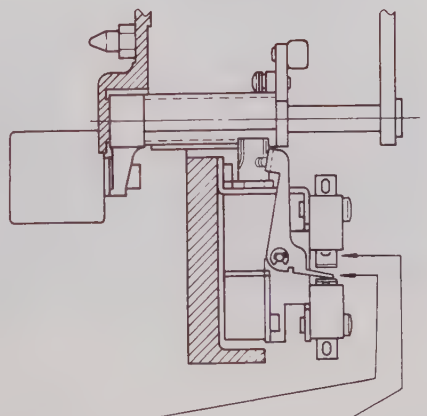

Fig. 5-19

1) Replacing the loading DC motor

- Dismount tape transport unit as directed in Section 5-2-1.
- Take out cassette compartment by 7 screws. Do not detach E-ring. (See Fig. 5-20)

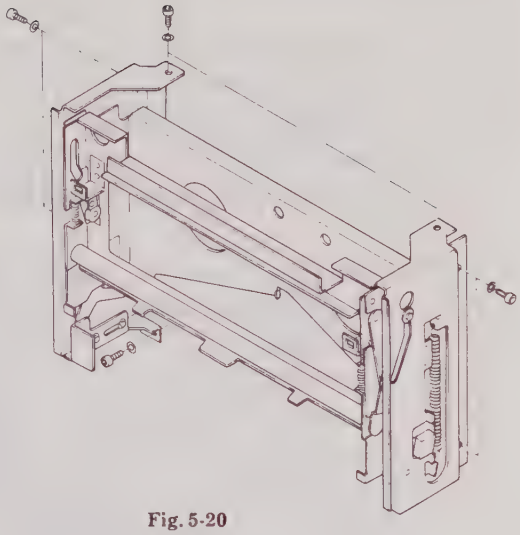

Fig. 5-20

- Attach protective paper on surface of magnetic head, then remove magnetic head (Prevent scratch).
- Unsolder leads from loader motor.
- Remove gear base by 4 screws. (See Fig. 5-21)
- Remove gear spring from left-side gear.
- Remove arm gear carefully.
- Shift left-side slide lever with fingers and unscrew loader DC motor by 4 screws.(See Fig. 5-22)

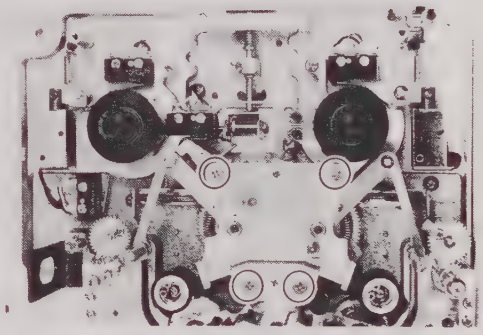

Fig. 5-21

- Remove motor, attach gear to replacement motor, and mount replacement motor on tape transport unit.
- Reverse above steps to complete loader DC motor assembly.

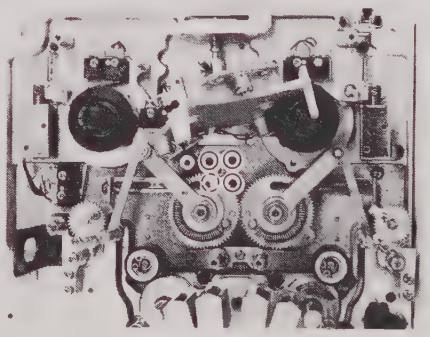

Fig. 5-22

J) Replacing the tension arm

- Dimount tape transport unit as directed in Section 5-2-1.
- Dismount the head assembly.
- Remove the tape and set the unit to the load state as directed in Section 5-2-2.
- Loosen the two screws on each side and dismount the right and left guide roller assemblies.
- Then loosen the cap screw and remove the tension arm assembly forward. (See Fig. 5-23.)
  Remember the position where the gear of the tension arm assembly is mating with the gear of the gear tension (B).
- Install a new tension arm to the above gears mating position.
- Mount a tension gauge (P/N 17853968-00). Adjust the position of the disk slit so that the reel motor starts rotating slightly in the FWD mode. (See Fig. 5-24.), and then tighten the cap screw.
  (Note that light should not be input to the tension sensor the outside.)
  See the item TTP DRIVER for the fine adjustment.
- Read a value for the tension of the tape in the FWD or REV mode with the Tentelo meter. (See Fig. 5-25.)
  Adjust the position of the spring hook tension on the TAKE-UP and SUPPLY sides in turn so that the read value becomes 65±10g (2.3±0.2 oz). (See Fig. 5-23.)

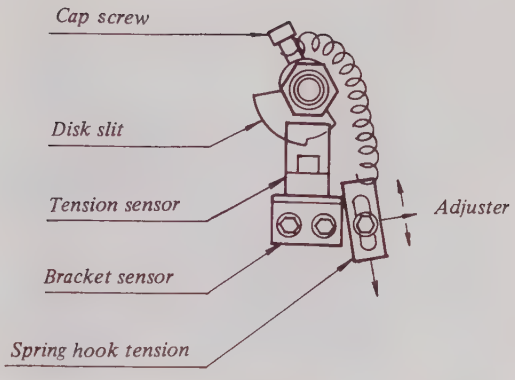

Fig. 5-23

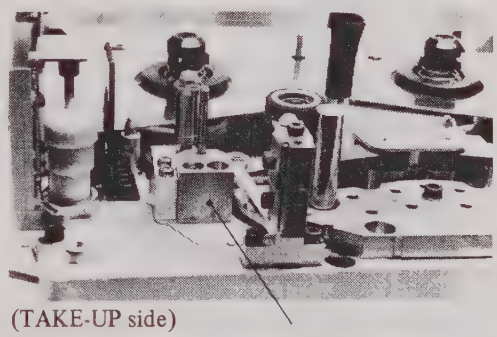

(TAKE-UP side)

Tension Gauge

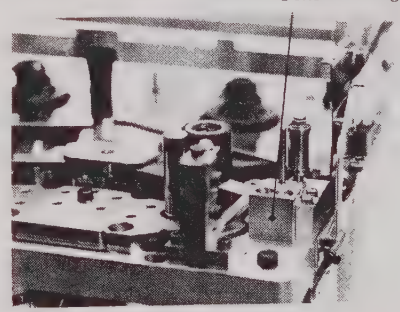

(SUPPLY side)

Fig. 5-24

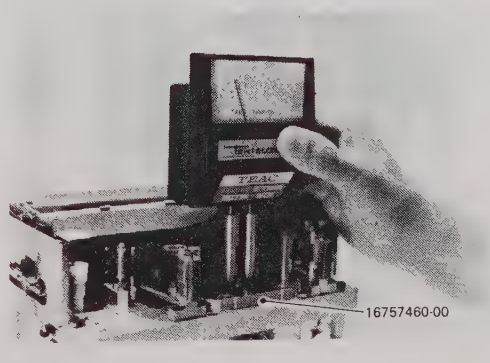

Fig. 5-25

5-2-4 Check and adjusting the tape transport unit

A) Micro-switches location and operation-1

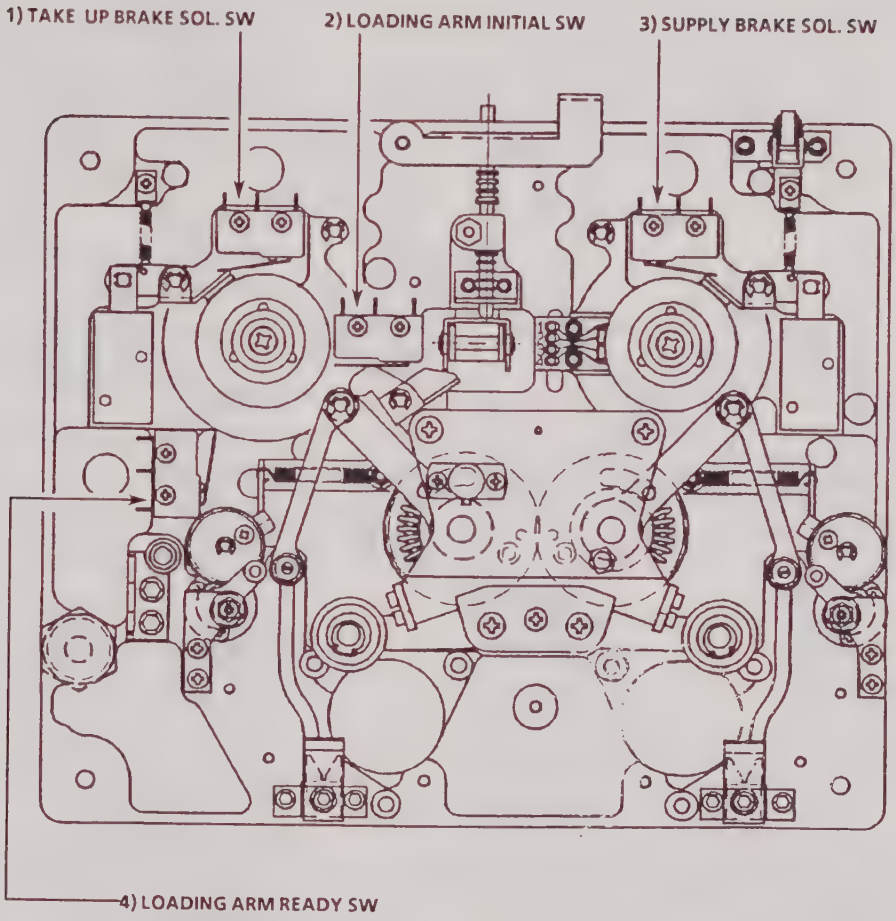

-FRONT VIEW-

Refer to on page 5-24 each switches description and number.

Micro-switches location and operation-2

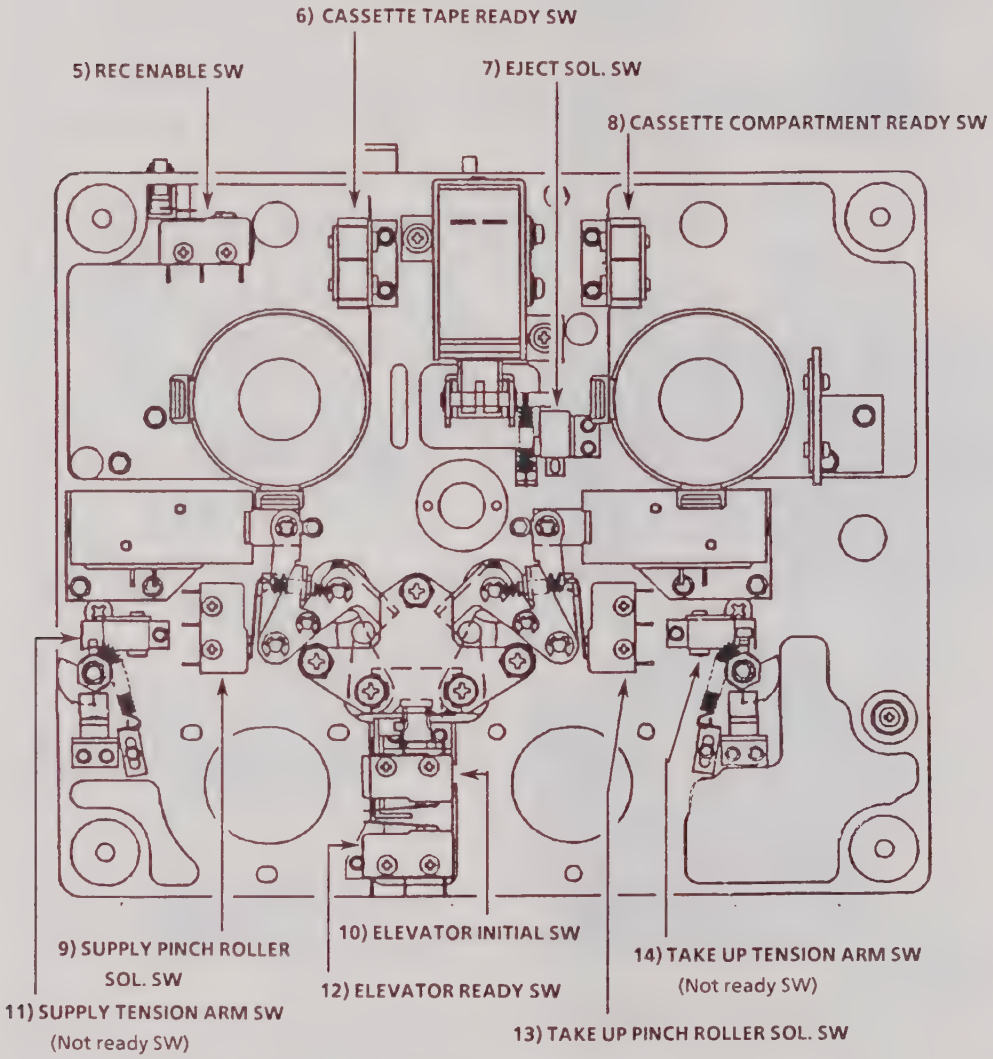

-REAR VIEW-

Refer to on page 5-24 each switches description and number.

B) Discription of micro-switches operation

Refer to micro-switches location on pages 5-22, 5-23 and also micro-switch position is shown Fig. 5-26.

-FRONT VIEW-

1) Take up brake solenoid switch

- The take up brake solenoid switch checks whether the take up brake is being applied.

2) Loading arm initial switch

- The loading arm initial switch detects that the tape transport is in initial state.

3) Supply brake solenoid switch

- The supply brake solenoid switch checks whether the supply brake is being applied.

4) Loading arm ready switch

- The loading arm ready switch detects that the tape transport is in ready state.

-REAR VIEW-

5) Record enable switch

- The record enable switch enables detection of whether the inadvertent erasure protection function is in effect.

6) Cassette tape ready switch

- When the cassette compartment assembly is locked, the cassette tape ready switch checks whether tape is loaded.

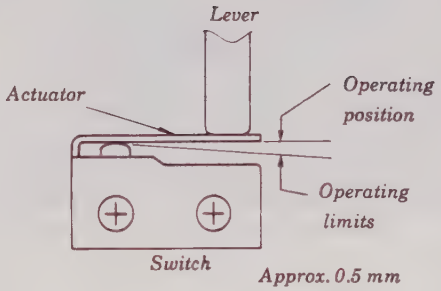

Fig. 5-26

7) Eject solenoid switch

- The eject solenoid switch checks whether the eject solenoid is deenergized (cassette compartment assembly) or energized (cassette compartment assembly to be ejected).

8) Cassette compartment ready switch

- The cassette compartment ready switch checks whether the cassette compartment assembly is locked in normal position.

9) Supply pinch roller switch

- The supply pinch roller switch checks whether the supply pinch roller is pressing the tape (operating state) or not (stand-by state).

10) Elevator initial switch

- The elevator initial switch detects that the pinch roller arm is retracted (initial state).

11) **Supply tension arm switch**

- The supply tension arm not ready switch checks whether the supply tension arm is not out of the operastion range.

12) **Elevator ready switch**

- The elevator ready switch detects that the pinch roller is at its highest position (ready state).

13) **Take up pinch roller solenoid switch**

- The take up pinch roller switch checks whether the take up pinch roller is pressing the tape (operating state) or not (stand-by state).

14) **Take up tension arm switch**

- The take up brake solenoid switch checks whether the take up tension arm is out of the operation range.

5-2-5 Pinch Roller Pressure

- Dismount tape transport unit as directed in Section 5-2-1.
- Connect main unit and tape transport with extension cable, and elevate pinch roller as directed in Section 5-5.
- Position white plastic pieces at right and left so that gap between pinch roller and capstan is approx. 1 mm (0.04 in).
  (Normally, readjustment is not required.(Fig. 5-27)
- Replace pinch roller screw with a bit longer one (M3 x 18 mm (0.7 in) or longer).
  CAUTION: Use metaric screw.
- Mount tape and advance it at medium speed 9.5 cm/s (3-3/4 ips).
- While exerting force to pinch roller gently with fingers, pull tension gauge hooked on long screw, and read tension gauge when pinch roller starts slipping. (Fig. 5-28)
- **Specified pinch roller pressure**

  RIGHT-SIDE: 1.5 (+0.2, -0) kg
  (3.3 +0.4,-0 lb)
  LEFT-SIDE : 1.5 (+0.2, -0) kg
  (3.3 +0.4,-0 lb)

- If requirements are not met, adjsut with adjusting screw. (Refer to Fig 5-29 on page 5-26)
- Mount tape transport unit.

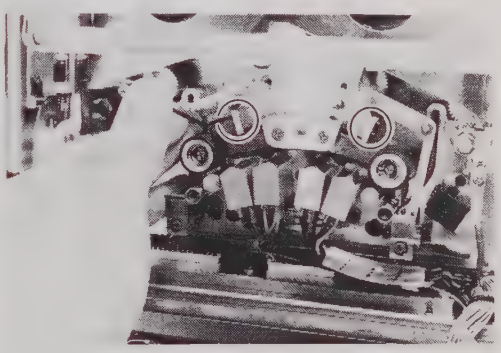

Fig. 5-27

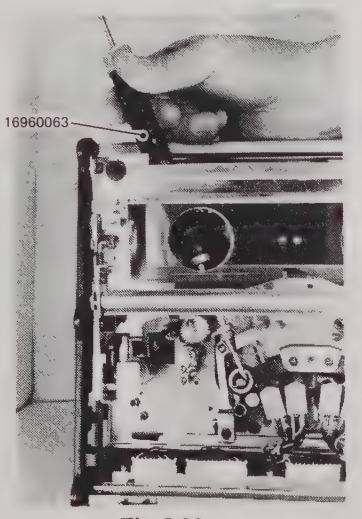

Fig. 5-28

5-2-6 Checking and adjusting tape running state

NOTE: In check and adjustment with square and height gauge, lighting white paper placed behind gauge makes it easier to see gaps between gauge and adjustment point.

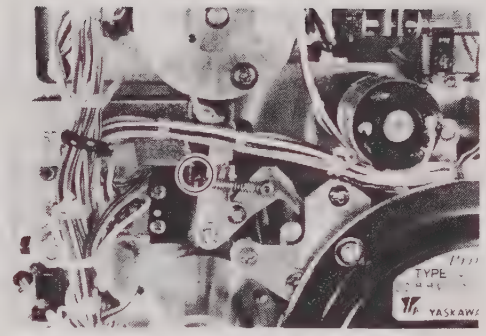

Fig. 5-29

A) Guide roller height adjustment

- Adjust height of both right-side and left-side guide rollers with square and height gauge.(See Fig. 5-30)
- Make sure that when tape speed is changed while tape is running forward, when direction in which tape runs is changed, or when an attempt is made to rewind tape at beginning of tape or to fast-forward it at end of tape, tape curl does not occur at top and bottom of guide roller. Also make sure that when supply reel guide roller is caused to stop rotating with tip of driver, height of tape does not vary at guide. (Adjustments described below need not be done as long as tape runs normally.)

Fig. 5-30

B) Checking tape running

- Remove record/reproduce head and erase head.
- Attach protective paper on surface of head (Prevent scratch).
- Mount head base jig in a place where heads were.
- Check height of tape inside and outside tape loop. If tape height varies, check height of guide again and square of pinch roller or capstan shaft. If loader guide is bent, correct it so that it fits in support.(Fig. 5-31)
- After adjustment described above, make sure that tape runs normally.

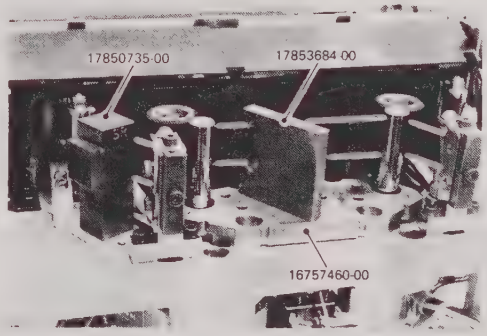

Fig.5-31

- Reverse steps above to mount magnetic head.

5-2-7 Brake torque

- Open cassette compartment and remove cassette panel.
- Move latching solenoid plunger to position in which brake is released, then check that there is gap of 1 mm (0.04 in) between brake shoe and reel table.
  If gap is less than 1 mm (0.04 in) reposition latching solenoid.
  (See Fig. 5-32)
- Return latching solenoid plunger to position in which brake is applied, and close cassette compartment.
- Fits brake dial jig set in torque dial gauge in reel table and set reel table to rotate at constant speed, then measure torque when brake is applied and released.
  If requirements are not met, reposition brake spring hook.
  (See Fig. 5-33)
  Specified brake left & right torque:

Released: **60 to 90g-cm (0.05 to 0.07 lb-in)** **Applied:** **200g-cm (0.17 lb-in)**

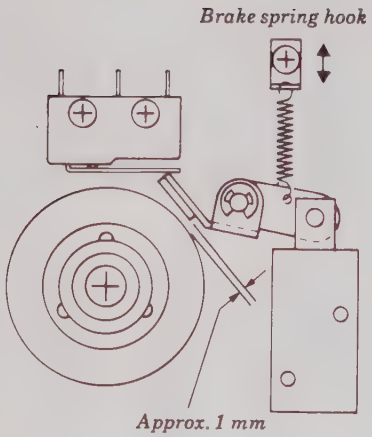

Fig. 5-32

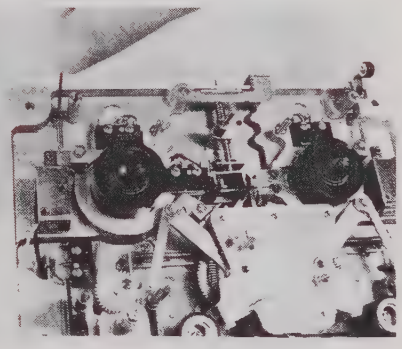

Fig. 5-33

- Upon completion of adjustments described above, load VHS video cassette, turn power off while tape is fast-forwarded at beginning of tape and tape is rewound at end of tape, and make sure that tape does not sag over 3 cm.

5-2-8 Checking the tape transport unit

A) Tape run test

- Check tape guide for angle and height with square and height gauge.
- Set tape to run and check that tape curl does not occur at tape guide. Remember that this check must be made at beginning/end of tape when tape is running at lowest (1.2 cm/s)/ highest (76 cm/s) speeds.

B) Tape speed

- Reproduce speed check tape (tape thickness: 20μ, T-120 equivalent) at specified speed.
- Measure frequency of FM REC/REP amplifier at TP-1 with frequency counter.
- Check frequency counter reading with specifications.

specification:

Tape speed		Deviation (Hz)	Deviation width (Hz)
cm/s	ips		
1.2	15/32	311 .875 to 313.125	1.25
2.4	15/16	623.5 to 626.75	2.5
4.8	1-7/8	1246.5 to 1252.5	5
9.5	3-3/4	12495 to 2505	10
19	7-1/2	4990 to 5010	20
38	15	9980 to 10020	40
76	30	19960 to 20040	80

- Tape speed deviation width: 0.2%
- Tape speed deviation: ±0.2% max

C) SN ratio

- Connect signal generator, data recorder, and RMS voltmeter as shown below.

NOTE:

1. Do not use exrternal filter between data recorder and RMS voltmeter.
2. Use RMS voltmeter with voltage drop of 3 dB or less at 10 Hz.

- At each tape speed, read ratio of output level of tape on which signal at standard frequency (1/10 fc) is recorded at maximum modulation,where fc = BAND EDGE frequency, to output level of tape on which recording is made with input short-circuited. (For SN ratio at each tape speed, refer to specification chart.)

D) Frequency response

- Connect signal generator, data recorder, and RMS voltmeter same as shown above item C).
- Keep amplitude of input sinusoidal wave constant (maximum modulation at standard frequency) and change frequency of input signal within passband, then read output level.

Standard frequency:
FM &DR ..... One-tenths of band edge frequency (1/10fc)

E) Skew (Dynamic/static)

- Connect sine-wave generator, data recorder, filters (1/2 fc band pass filter) and dual trace oscilloscope as shown below.

- Operate data recorder in simultaneous FM record/reproduce mode, and observe phase shift between channel 1 and another channel with oscilloscope.

Specifications

XR-5000 (14 CH Unit)		XR-7000 (21 CH Unit)	
CH	μsec	CH	μsec
1	Standard	1	Standard
2	±33.5	2	±33.5
3	± 8.0	3	± 7.0
4	±35.0	4	±34.5
5	± 9.5	5	± 8.5
6	±36.5	6	±35.5
7	±11.0	7	± 9.5
8	±38.0	8	±36.0
9	±12.0	9	±10.5
10	±39.0	10	±38.0
11	±13.5	11	±11.0
12	±40.5	12	±39.0
13	±15.0	13	±12.0
14	±42.0	14	±40.0
		15	±13.0
		16	±40.0
		17	±14.0
		18	±40.5
		19	±15.0
		20	±41.5
		21	±15.5

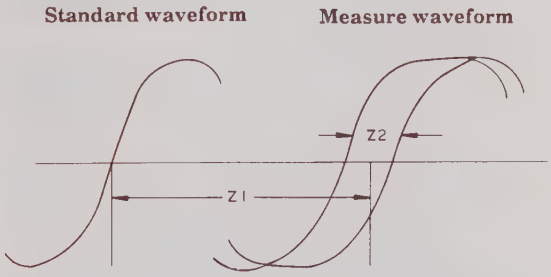

Z1 = Statics skew
Z2 = Dynamic skew (ITDE)
Skew = Z1 + 1/2 Z2

- There shall be a normally large difference in skew between beginning and end of tape.
- Run tape reverse and measure skew. If skew measured during reverse run and that measured during forward run are equal in size, but different in polarity, nothing is wrong with tape transport unit.

F) Capstan belt tension

- Loosen capstan assembly mounting screws a little.

- Position pulley on capstan assembly side so that appling weight of 1 kg (2.2 lb) causes belt to deflect 5 mm (0.2 in) or so. (See Fig. 5-34)

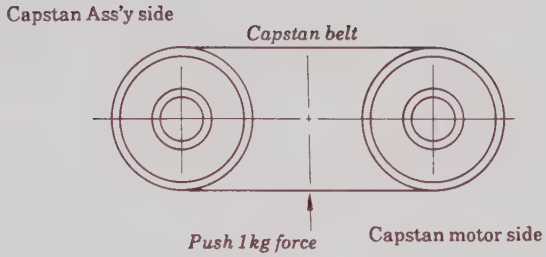

Fig. 5-34

Position pulley on capstan assembly side so that appling weight of 1kg causes belt to defect 5mm or so.

G) Wow and flutter

- Connect wow/flutter meter to TP-1 of FM REC/REP amplifier and short-circuit input, then read wow/flutter meter with data recorder in simultaneous record/reproduce mode.

Tape speed: 1.2 (15/32), 2.4 (15/16), 4.8 (1-7/8), 9.5 (3-3/4), 19 (7-1/2), 38 (15) and 76 cm/s (30 ips).

Input: Short circuited

Tape position: Beginning/end, complying with IRIG (118-73)

Specification:

Tape speed		Bandwidth (Hz)
(cm/s)	(ips)	
1.2	15/32	1.0%p-p (0.5 to 78)
2.4	15/16	0.6%p-p (0.5 to 156)
4.8	1-7/8	0.5%p-p (0.5 to 313)
9.5	3-3-/4	0.4%p-p (0.5 to 625)
19	7-1/2	0.3%p-p (0.5 to 1250)
38	15	0.25%p-p (0.5 to 2500)
76	30	0.25%p-p (0.5 to 5000)

SECTION 6

TROUBLESHOOTING

6-1 Flowchart of defective running
6-2 Flowchart of defective recording/reproduction

SECTION 6
TROUBLESHOOTING

6-1 FLOWCHART OF DEFECTIVE RUNNING

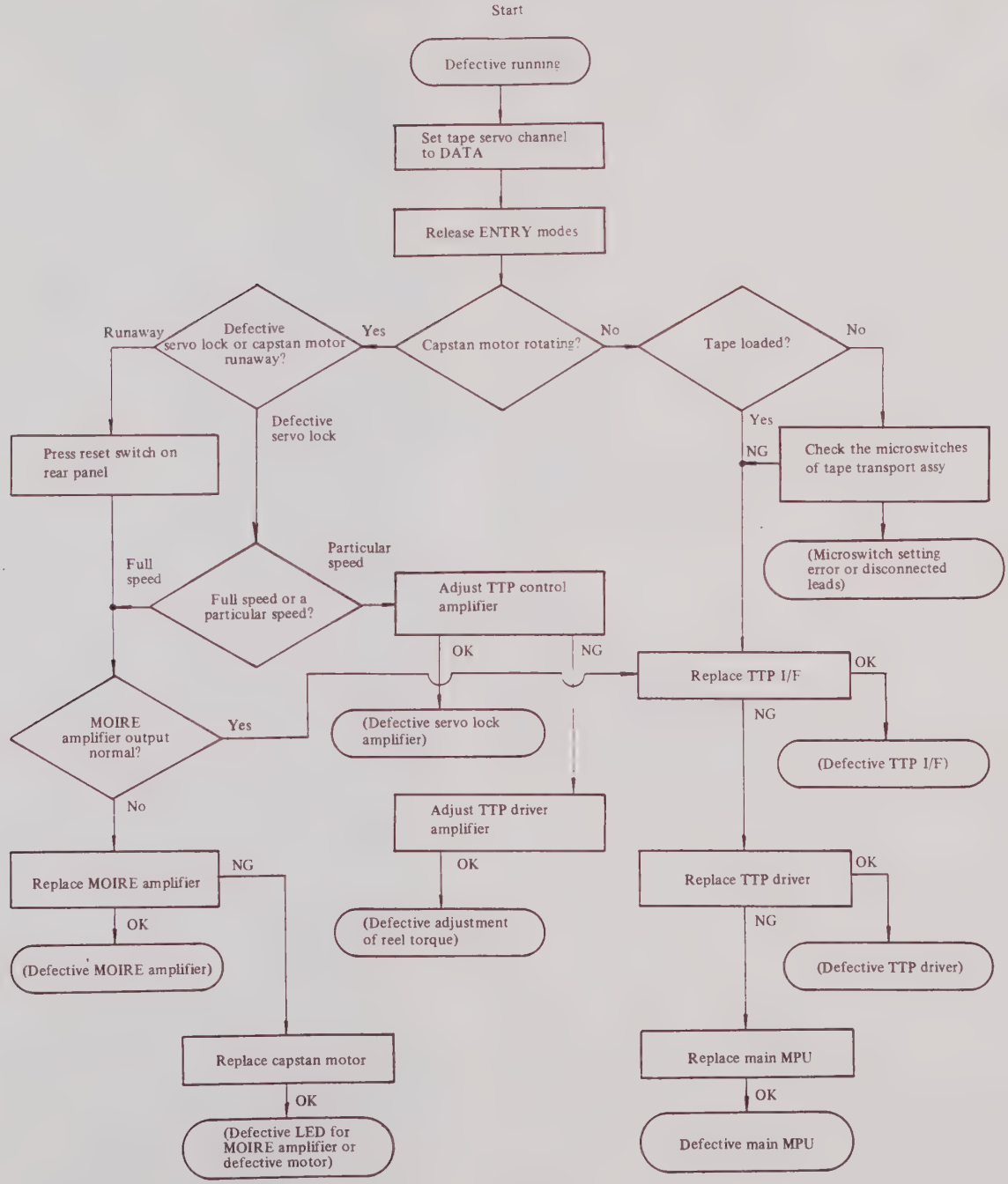

6-2 FLOWCHART OF DEFECTIVE RECORDING/REPRODUCTION

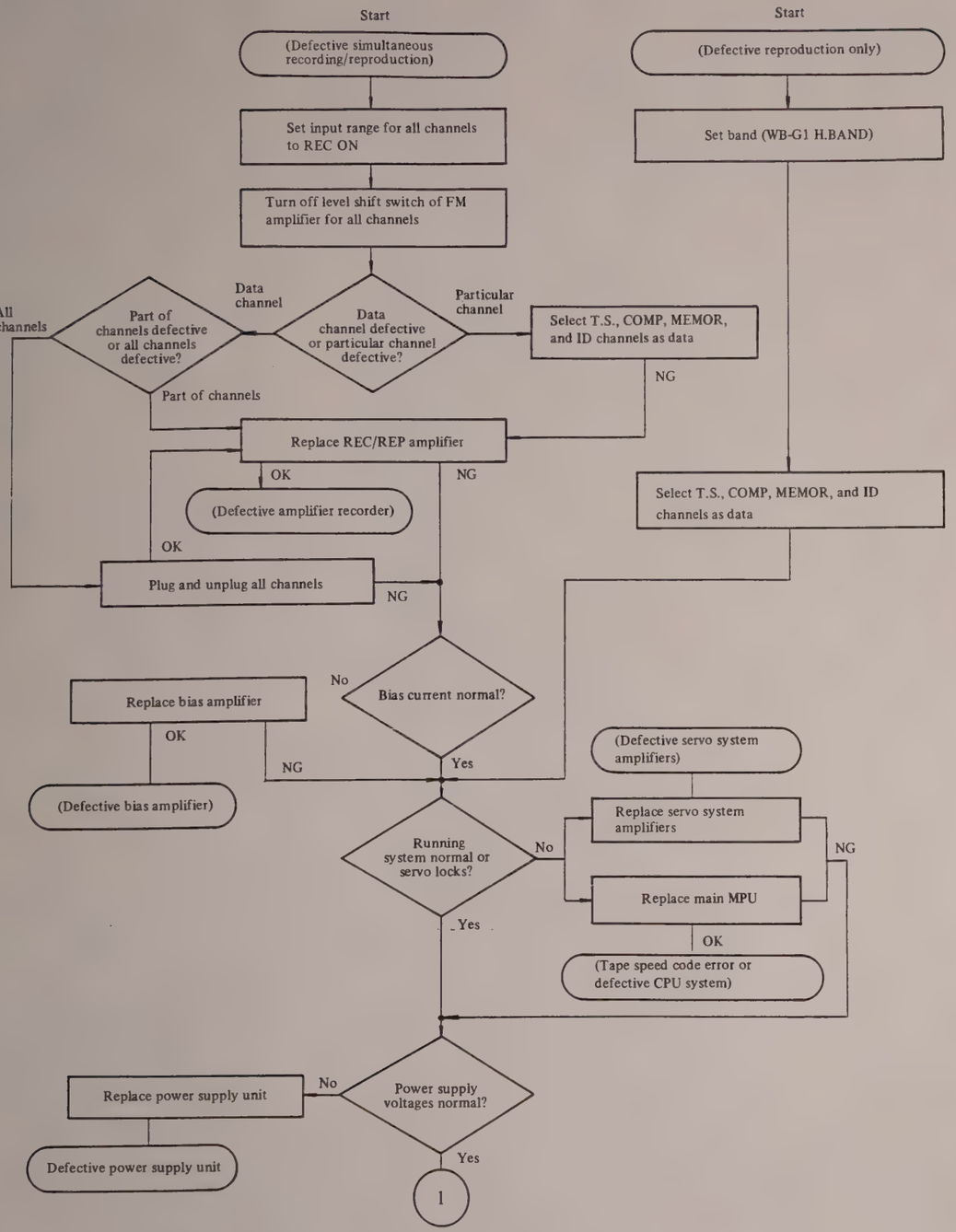

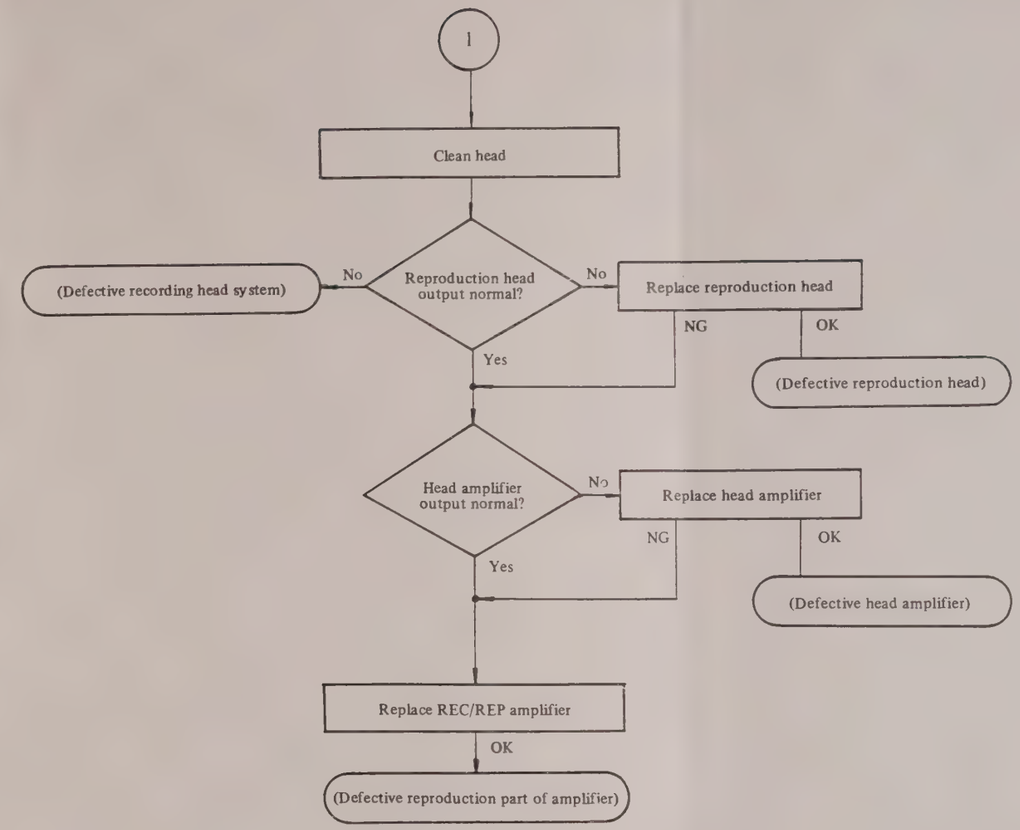

SECTION 7

PARTS ORDERING INFORMATION

7-1 Assembling hardware coding list

7-1 ASSEMBLING HARDWARE CODING LIST

All screws conform to ISO standards, and have crossrecessed heads, unless otherwise noted. ISO screws have the head inscribed with a point as in the figure to the right.

FOR EXAMPLE:

B M3 x 6

- Length in mm (L)
- Diameter in mm (D) *
- Metric System
- Nomenclature

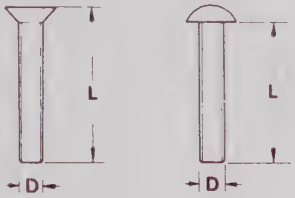

* Inner dia. for washers and nuts

	Code	Name	Type
MACHINE SCREW	R	Round Head Screw	
	P	Pan Head Screw	
	T	Stove Head Screw (Truss)	
	B	Binding Head Screw	
	F	Flat Countersunk Head Screw	
	O	Oval Countersunk Head Screw	
WOOD SCREW	RW	Round Head Wood Screw	
	FW	Flat Countersunk Wood Screw	
	OW	Oval Countersunk Wood Screw	
SEMS SCREW	BSA	Binding Head SEMS Screw(A Type)	
	BSB	Binding Head SEMS Screw(B Type)	
	BSF	Binding Head SEMS Screw(F Type)	
	PSA	Pan Head SEMS Screw(A Type)	
	PSB	Pan Head SEMS Screw(B Type)	

	Code	Name	Type
TAPPING SCREW	BTA	Binding Head Tapping Screw(A Type)	
	BTB	Binding Head Tapping Screw(B Type)	
	RTA	Round Head Tapping Screw(A Type)	
	RTB	Round Head Tapping Screw(B Type)	
SETSCREW	SF	Hex Socket Setscrew(Flat Point)	
	SC	Hex Socket Setscrew(Cup Point)	
	SS	Slotted Socket Setscrew(Flat Point)	
WASHER	E	E-Ring (Retaining Washer)	
	W	Flat Washer (Plain)	
	SW	Lock Washer (Spring)	
	LWI	Lock Washer (Internal Teeth)	
	LWE	Lock Washer (External Teeth)	
	TW	Trim Washer (Countersunk)	
NUT	N	Hex Nut	

SECTION 7
PARTS ORDERING INFORMATION

When ordering parts, always include the following information:

1. MODEL
2. UNIT SERIAL NO.
3. DESCRIPTION
4. REF. NO.

NOTICE REGARDING PARTS ORDERS

1. In some instances, indivisual minor parts are not available. In this case, the entire assembly, including the part requested, will be sent to you.
2. Do not order by only REF. No. or Description.
3. Parts marked with an * require longer delivery time, about two to three months.

NOTE:

- CAPACITORS -

CC = Ceramic, Magntic capacitor.
CS = Tantalum.
CQ = Metallized film capacitor, Film capacitor, Metallized Polypropylene film.
CE = Aluminium electrolytic capacitor.

- RESISTORS -

RD = Carbon.
RN = Metal film.
VR = Variable resistor.

SECTION 8

OPTION

SECTION 8 OPTION

Many kind of optional unit are available for the XR-5000/7000.
The models can be used more extensively with following units.
For more information, refer to the separates those optional units "INSTRUCTION MANUAL" for details.

FM recording/reproduction amp.:	AR-250FM
DR recording/reproduction amp.:	AR-250DR
Supper FM AMP Unit:	AR-250SFM
PCM recording/reproduction amp.:	AR-250PCM
Remote control unit:	ER-90
Printer:	PT-50
GP-IB interface unit:	AR-507
Rack-mounted adaptor (for EIA):	TZ-46RME
Rack-mounted adaptor (for JIS):	TZ-46RMJ
V mount adaptor:	TZ-46VM
Front angle:	TZ-47

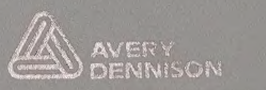

Office Products
TORRANCE, CA 90503